280711-511287

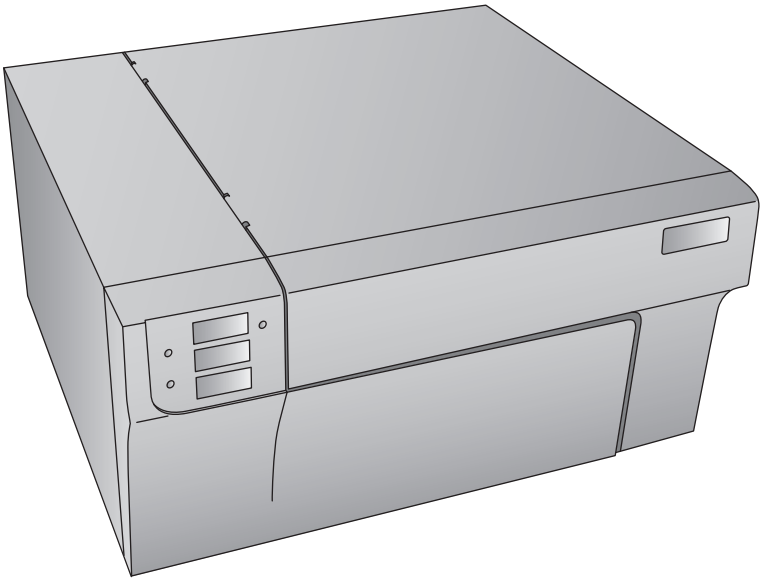

RX900e
COLOR RFID PRINTER

User's Manual

© 2011 All rights reserved
For the most recent version of this manual please visit
http://www.primera.eu/manuals.html

RFID

Table of Contents

Section 1: Getting Started **1**
- A. Choosing a Good Location 1
- B. Unpacking and Inspection 2
- C. Identifying the Parts 3
- D. Computer Specifications 5

Section 2: Label Stock **6**
- A. Label and Roll Specifications 6
- B. Installing Label Stock 9
- C. Adjusting the Label Stock TOF (Top of Form) Sensor 12
- D. Set the Stock Sensor 14
- E. Set the Output Mode 15

Section 3: Using RFID **17**
- A. Setup 17
- B. Printing and Encoding 19
- C. Other Functions 20

Section 4: Ink Cartridges (Status Monitor) **21**
- A. Monitoring Ink Levels 22
- B. Using the Cost Estimator 23
- C. Replacing Ink Cartridges/Low Ink Warning 24

Section 5: Printing **27**
- A. Using NiceLabel 27
- B. Creating Barcodes in NiceLabel 33
- C. Printing from Other Programs 36
- D. Adjusting Print Alignment 37
- E. Creating a Full Bleed Print 39
- F. Printer Driver Settings 40

Section 6: Troubleshooting and Maintenance **45**
- A. Solving Print Alignment Problems 45
- B. Solving Print Quality Problems 47
- C. Color Matching and Design Tips 49
- D. Create a Support Report 52
- E. Cleaning the Printer 52
- F. Cleaning the Printhead 53
- G. Replacing the Printhead 54
- H. Interpreting the Printer's Indicator Lights 57
- I. Technical Support 58

Section 7: Technical Specifications **59**

Section 8: Notices and Warnings **60**

Index **62**

Section 1: Getting Started

THANK YOU...

...for choosing an RX900e Color RFID Printer. The RX900e Printer will print razor-sharp text and barcodes, vibrant colors, and even stunning photo-realistic photographs directly onto RFID label stock and a variety of other approved media.

This User's Manual is your complete step-by-step guide to quickly and easily setting up and printing with your new RX900e!

A. CHOOSING A GOOD LOCATION

- Place the printer on a flat surface in a location with adequate air circulation to prevent internal heat build up.
- Do not place the printer near heat sources such as radiators or air ducts, or in a place subject to direct sun light, excessive dust, mechanical vibration or shock.
- Allow for adequate clearance in front of the printer to accommodate the printed label stock as it is leaving the printer to avoid the possibility of binding or jamming of the label stock.
- Allow for adequate overhead and left side clearance for opening the top cover to allow easy access to the label stock and ink cartridge. The Printer will require 9.5 inches (24 cm) of additional space on the left side to completely open the cover (Total = 26.75" or 68 cm). The Printer will require an additional 15.9 inches (40.4 cm) of overhead space to open the cover (Total = 25" or 63.5 cm).

B. UNPACKING AND INSPECTION

While unpacking your printer, inspect the carton to ensure that no damage has occurred during shipping. Make sure that all supplied accessories are included with your unit. The following items are included in the supply box:

- Power Adapter
- Separate Power Cord
- USB Cable
- Software Installer CD
- Cyan, Magenta, Yellow and Black Ink Cartridges
- This Manual and other Printed Information

The following items are inside the printer supply roll area:

- Replaceable Print head
- Starter Roll of High Gloss Label Stock

Save the carton and packing materials. They will come in handy when transporting the printer.

C. IDENTIFYING THE PARTS

This illustration shows the front of the printer with its control buttons and LED indicator lights.

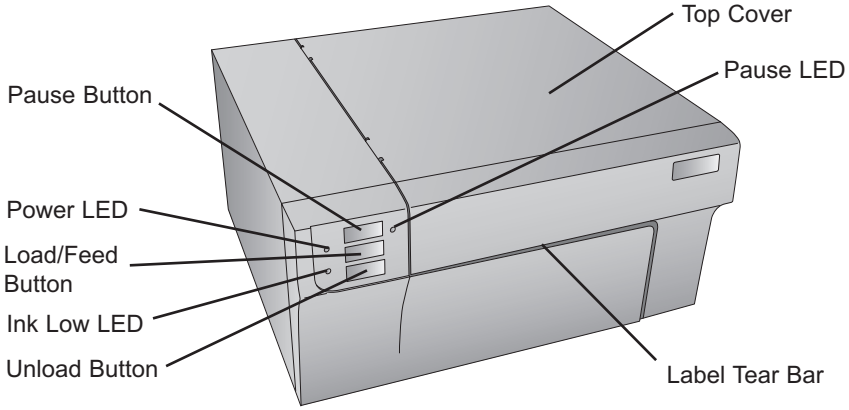

The **Pause Button** pauses the printer AFTER the printing of the current label has finished to allow for loading of label stock and ink cartridge.

The **Power LED** indicates that the printer is on and ready to receive print jobs.

The **Load/Feed Button** is pressed in order to load label stock if the printer does not automatically detect the stock. When stock is loaded each press of the button will cause one label to be fed from the printer.

The **Ink Low LED** will illuminate when a cartridge has 10% or less of its ink remaining.

The **Unload Button** will unload the installed label stock by reversing it through the printer. Make sure to tear off the printed labels before pressing the Unload Button.

The **Label Tear Bar** is a serrated edge for conveniently tearing your finished labels from the printer. The printer comes with a white tear bar guard. For smoother label feeding, leave the guard in place during printing. When you are ready to tear off a label, remove the guard, tear off the label and replace it.

This illustration shows the input ports and power switch found on the rear panel of the printer.

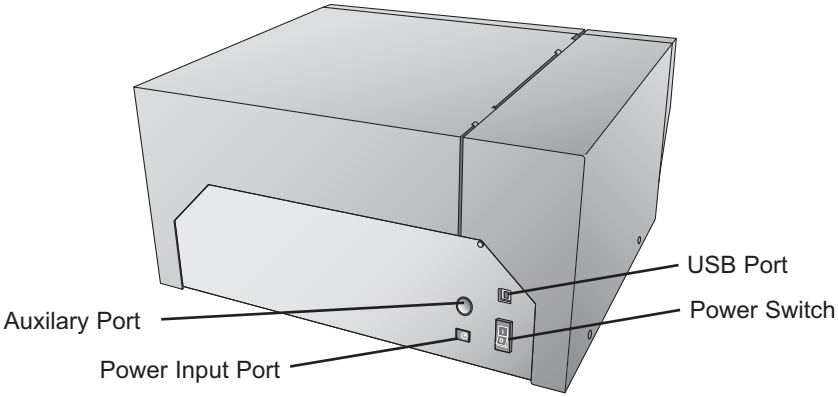

This illustration shows the interior of the printer.

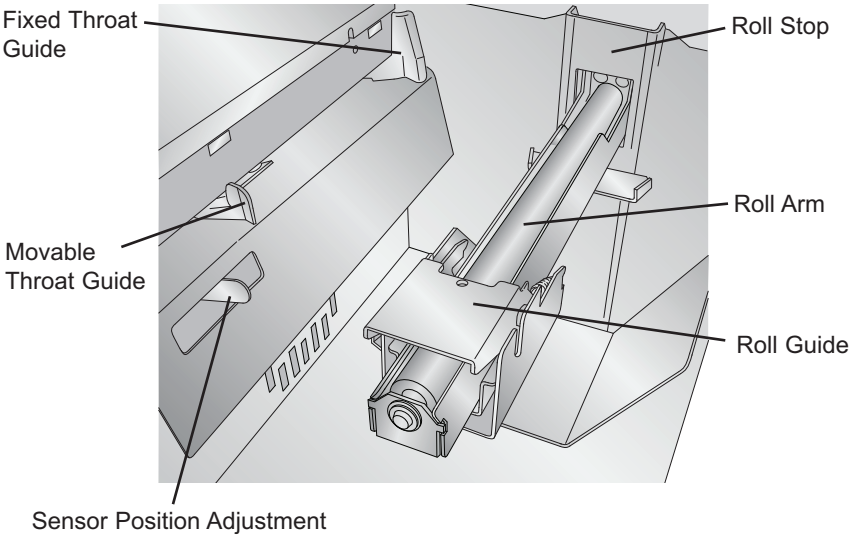

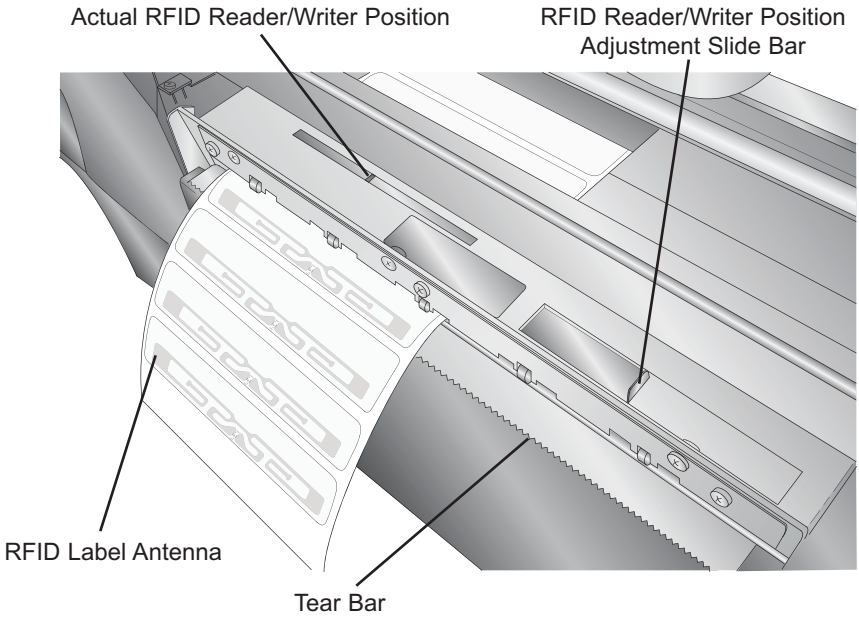

D. COMPUTER SPECIFICATIONS

Recommended PC Specifications

For optimal printing speed you must have a PC with the following recommended specifications:

- Pentium Dual Core Processor
- 2 GB of RAM
- 10 GB of Free Hard Drive Space

Section 2: Label Stock

A. LABEL AND ROLL SPECIFICATIONS

A wide variety of label stock can be used in the Printer. Refer to the specifications and settings in the following sections before ordering custom stock from Primera or any stock from another company.

Important! *Test all custom made label stock with the intended printer before ordering large quantities! Primera will only assume responsibility for custom label stock ordered from Primera.*

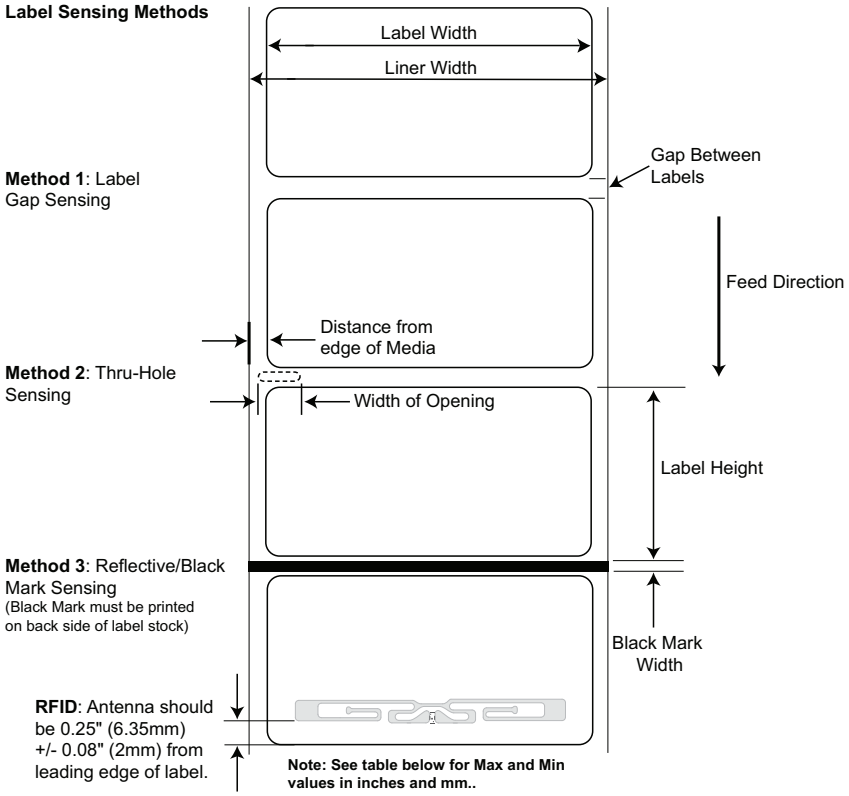

	Max	Min
Label width	8.25" (209mm)	0.75" (19mm)
Liner/media width	8.375" (212mm)	1.5" (38mm)
Label height/length	17" (431mm)	0.75" (19mm)
Gap between labels	10" (253mm)	0.10" (2.5mm)
Width of thru-hole opening	0.5" (12.65mm)	0.25" (6.325mm)
Distance from edge of media to edge of thru-hole	2.25" (57mm)	0.20" (5.06mm)
Reflective/Black Mark Width*	N/A	0.1" (2.54mm)
Max Outer Diameter (OD)	6.0" (152.4mm)	N/A
Inner Core Diameter (ID)	3.0" (76.2mm)	3.0" (76.2mm)
Total Thickness (Liner + Label)**	.0075" (7.5 mil)	N/A
Distance from edge of media to edge of label	Printer driver assumes 2 mm gap. However, this is adjustable via the left margin offset.	

* The Reflective/Black Mark should be opaque to infared light. The mark should be between the labels. The end of the mark should correspond with the beginning of the label.

**There are two factors that determine whether the printer will accept any particular stock thickness.

1. The ability for the printer to pull the paper through the print area.
2. The ability for the sensor to read through the backing if the sensor is set to diecut.

If you are printing in continuous or reflective label sensing mode number 2 does not apply. The fact that the printer must read through the backing in die-cut mode will limit the thickness much more than the printers ability to pull the paper through the print area. However, if you adjust opacity level of the liner enough to allow the label to be seen by the stock sensor, the thickness will only be limited by the printers ability to pull it through the printer area. For these reasons the weight or thickness of the liner is a variable that can not easily be defined. Primera recommends and uses 40# liner with all label stock. **It is important to test all label stock with the intended printer before ordering large quantities!**

Roll Specifications

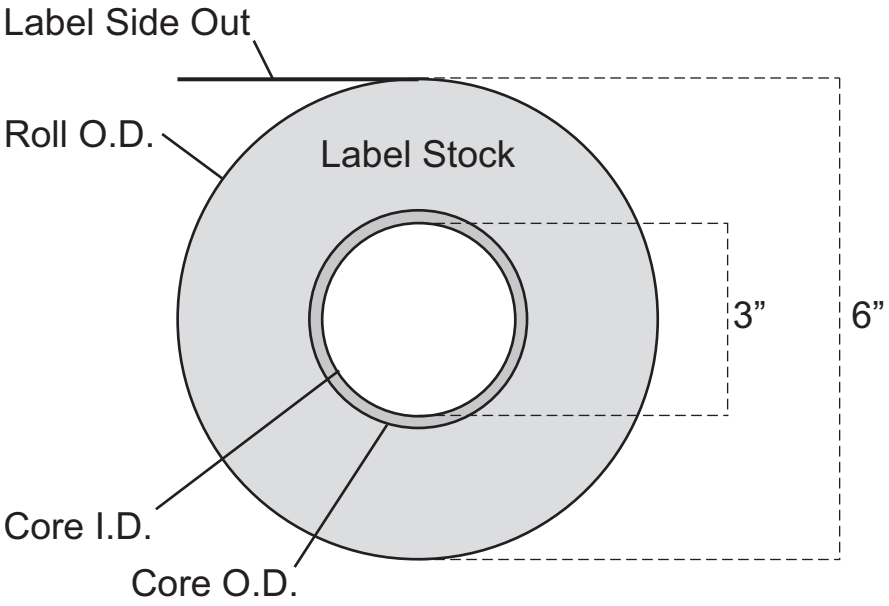

Note on Label Orientation: *If you are using an applicator to apply your labels, be sure to order label stock with the correct orientation for your applicator. For example most applicators will apply the side of the label first, so you will want to print the labels sideways.*

B. INSTALLING LABEL STOCK

The following steps will guide you through loading label stock in your printer:

Make sure power is connected and printer is on.

1. Open the Top Cover.

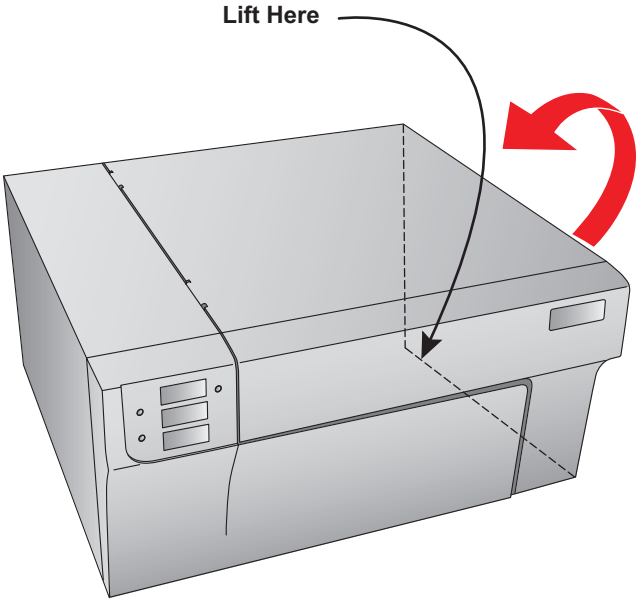

2. Lower the Roll Guide and pull it outward to make room for your label stock.

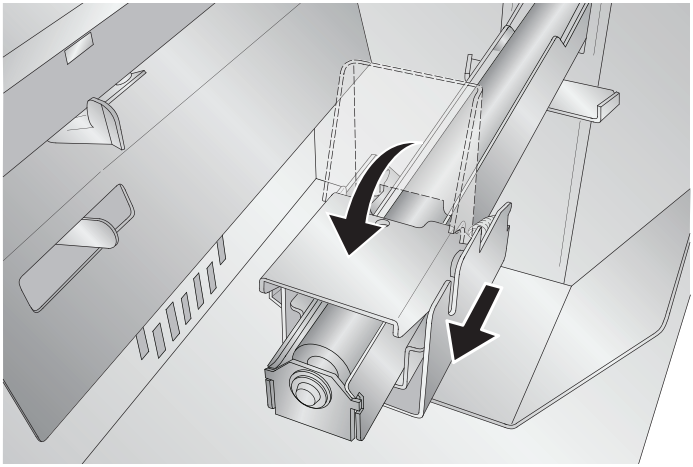

3. Remove any shipping tape from your label stock roll to ensure that it can unroll freely, making certain that no adhesive portion is exposed. It is important to note that any exposed adhesive surface can attach itself the inner workings of the print mechanism and cause a media jam.
4. Place your roll of label stock on the Roll Arm and push it inward until it touches the Roll Stop.

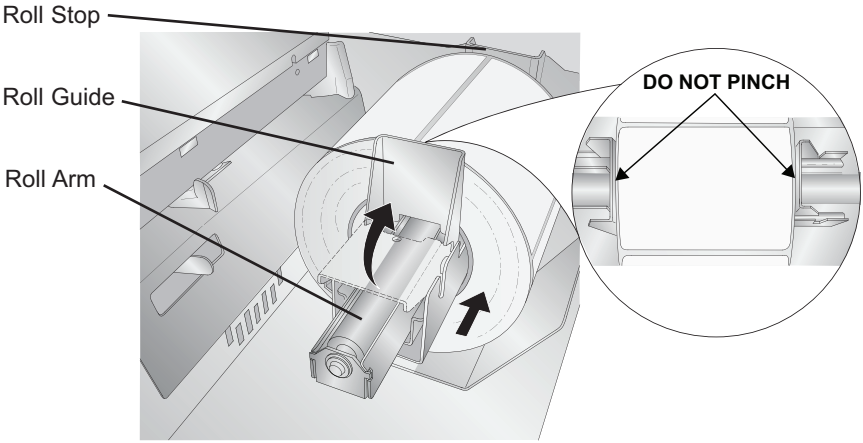

5. Flip up the Roll Guide and slide it inward until it touches the label stock. The Roll Guide will automatically pull back slightly to the correct position. There should be approximately a 1mm gap between the roll guide and the roll.

Important Note: *Be aware that some label stock may have a core that is slightly too large for the roll or the labels may have wrapped unevenly causing some to stick out beyond the edge of the core. Both of these issues can cause feeding problems.*

6. Pull the Movable Throat Guide outward to make room for the label stock.

7. Place the leading edge of the label stock under the "label stock" symbols on the Throat Guides. The label stock should be placed far enough into the throat of the printer to correctly position the Movable Throat Guide but not yet into the printer itself.

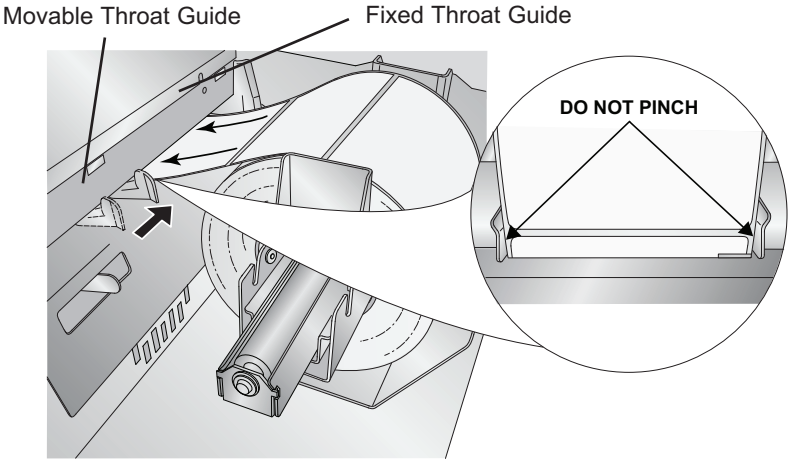

8. Slide the Movable Throat Guide inward until it **almost** touches the label stock.

Important Note: *The label stock should be close enough to the Fixed and Movable Thoat Guides to provide proper guidance but not close enough to pinch the label stock. (0-1 mm gap on either side) If the label stock is pinched by the guides, poor print quality or feeding problems could result.*

9. Feed the label stock further into the printer until it senses the label and automatically feeds it through the printer. If the printer fails to feed the label stock, press the Load/Feed button on the front panel while continuing to guide the label stock into the printer. If the printer does not automatically grab and feed the stock or continues to feed the stock without stopping check the Stock Sensor position or mode (Section 2C or 2D).

C. ADJUSTING THE LABEL STOCK TOF (TOP OF FORM) SENSOR

If you are using label stock other than standard square / rectangular diecut labels such as circular die-cut labels or through-hole stock use the instructions below to adjust the position of the label stock sensor. The sensor can be adjusted using the slide bar on the inside of the printer. Below the slide bar is a measurement which represents the distance between the edge of the label stock and the sensor. Measure the distance from the edge of the label stock to the correct position on the stock. Set the sensor to this measurement.

Important Note: *You must adjust the Stock Sensor before loading non-standard label stock.*

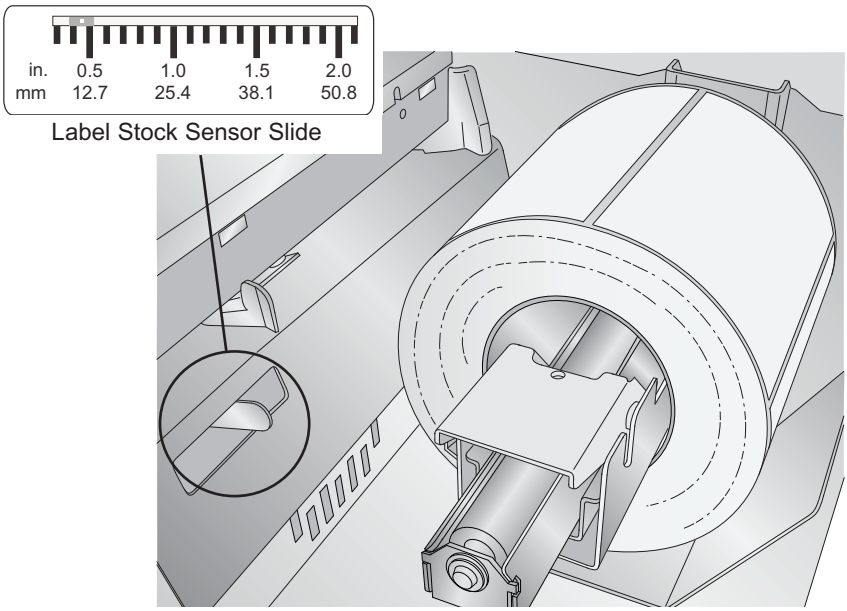

Circular Labels

If you are using Circular Labels you must adjust the Stock sensor to correspond with the very top of the label where the circles are closest together. If the sensor is too far to the right or the left the printer will still sense the label but the image may be offset downward because the printer will start printing at the wrong position. If you are using stock that has multiple

labels across make sure the sensor corresponds to a place on the stock that has a label and not a vertical gap.

The sensor can only be moved a maximum of 2.3 inches from the left side of the printable area. This means that the maximum diameter circular label that can be printed is 4.6 inches. For circular labels larger than 4.6 inches in diameter, you must have a black mark printed on the back of the label stock. This means that you must change the Stock Sensor Mode to Reflective. The printer will now look for the black mark

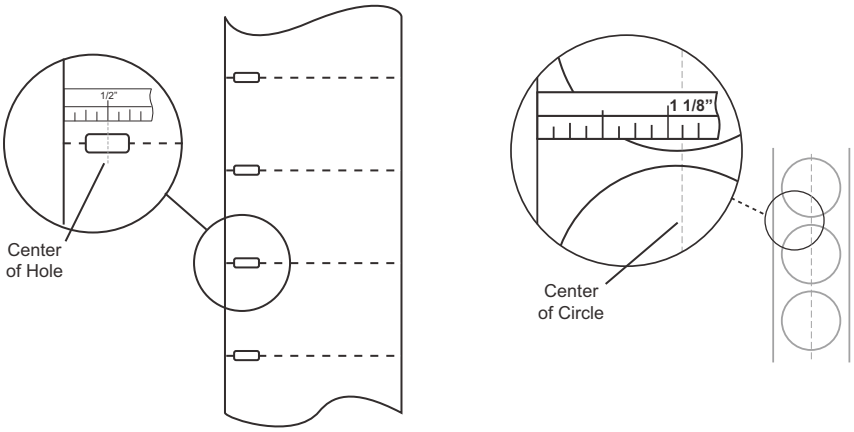

Through-Hole Labels

Circular Labels

Set Sensor Bar to 1 1/8" for 2" circular label (1/8" liner edge gap).

representing the beginning of the next label instead of the diecut. For more information on changing the Stock Sensor Mode see Section 2D.

Through-Hole Labels

If you are using card stock or label stock that has a hole punch or a notch to identify a transition from backing to label, you can adjust the Stock Sensor to position it over the identifying mark.

D. SET THE STOCK SENSOR MODE

The stock sensor mode refers to the method the printer will use to detect the print starting position for each label. To adjust the stock sensor mode, open the PTStatus program. PTStatus automatically installs with your printer driver and can be accessed through the printer driver or as program that is accessible in the same manner as all other programs.

Important Note: *Set the Stock Sensor Mode* ***BEFORE*** *loading label stock!*

1. Connect the printer via USB and turn on the power. The Stock Sensor Mode setting is stored on printer main board so you will not be able to access it unless the printer is turned on and properly communicating with the computer.
2. Go to Start - Programs - Primera Technology - PTStatus.
3. Click on the Alignment Tab (3rd tab from top).
4. Click on the Stock Sensor Mode button.
5. Select the Stock Sensor Mode by clicking on graphic that most closely corresponds to the stock you intend to install.

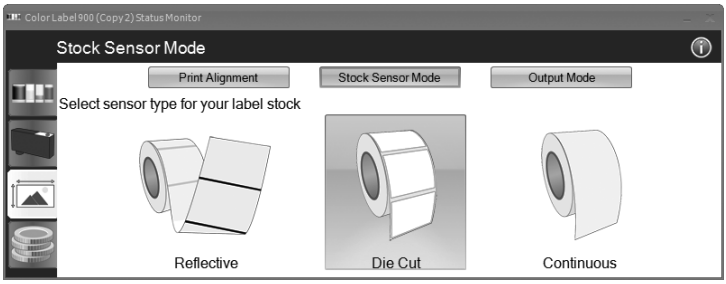

There are three sensor modes:

Die Cut (Default). If you are using standard die-cut labels that look similar to the graphic use this setting regardless of the size of the label. Also, use this setting for Through-hole label material where a hole is punched through each label or a notch is cut in the side.

Reflective. Use Reflective for label material where a black pre-printed line (black mark) on the back of the label stock indicates the break between labels. Black marks are required on clear label stock rolls, or label where the label waste matrix (waste) is left on the liner. Black marks can also be used for irregular shaped labels, circles larger than 4.6 inches or on any

stock where the print starting position can not be sensed using the label itself.

Continuous. (Sensor off) If you have continuous stock with no die-cut, reflective mark or holes, set the sensor type to Continuous. This will turn off the stock sensor. It this mode there is no way to set the print starting position. The printer will simply start printing the first label and print each subsequent label immediately after that previous one. To produce a gap between prints simply add the desired amount of white space to the end of the label being printed.

Important Note: *You must also set the Stock Sensor Position (Section 2C) so that the sensor is sensing the correct point on the label stock.*

E: SET THE OUTPUT MODE

Toggle the Output Mode to set whether or not the last label printed will be presented or left inside the printer. To adjust the output mode, open the PTStatus program. PTStatus automatically installs with your printer driver and can be accessed through the printer driver or as program that is accessible in the same manner as all other programs.

1. Connect the printer via USB and turn on the power. The Output Mode Setting is stored on printer main board so you will not be able to access it unless the printer is turned on and properly communicating with the computer.
2. Go to Start - Programs - Primera Technology - PTStatus.
3. Click on the Alignment Tab (3rd tab from top).
4. Click on the Output Mode button.
5. Select the Output Mode by clicking on the corresponding graphic.

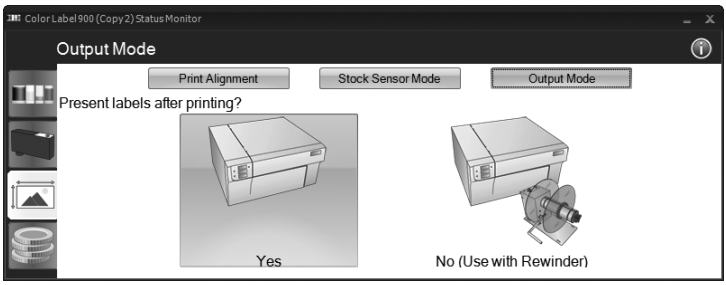

There are two different output modes:

Present labels? - Yes (Default). This setting will cause the printer to feed the last label printed forward so that it and the previously printed labels can be torn off using the tear bar. If no other jobs are sent to the printer within one second after the last label has printed, the last printed label will present for tear off.

Present labels? - No (Use with Rewinder). In this mode the label stock does not move after the last label is printed. This means that part of the last label printed is still in the printer. This should be used only if you have a label rewinder attached. To retrieve the final label you must press the Load/Feed button on the printer control panel.

Section 3: Using RFID

A: SETUP

RFID Label Stock should have an antenna imbedded between the label adhesive layer and the liner. The antenna should be oriented to the front of the label stock and centered within the label.

Follow these instructions each time you load a new roll of RFID Label Stock.

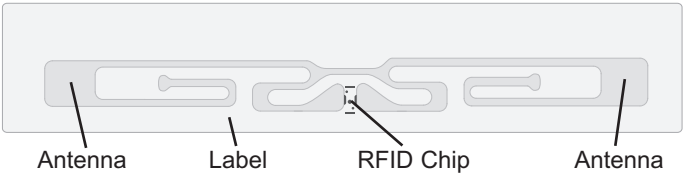

1. Load your RFID label stock according to the instructions printed on the inside cover of your RX900e and found in Section 2B.
2. Before you start printing, adjust the slide bar so the Reader/Writer marker is approximately 1/8" (3mm) left or right from center chip of the antenna. Open the cover of the printer. You will find the slide bar and marker near the front of the printer right behind the tear bar.

Note: *Write success is less likely as you move the marker away from the center of the label.*

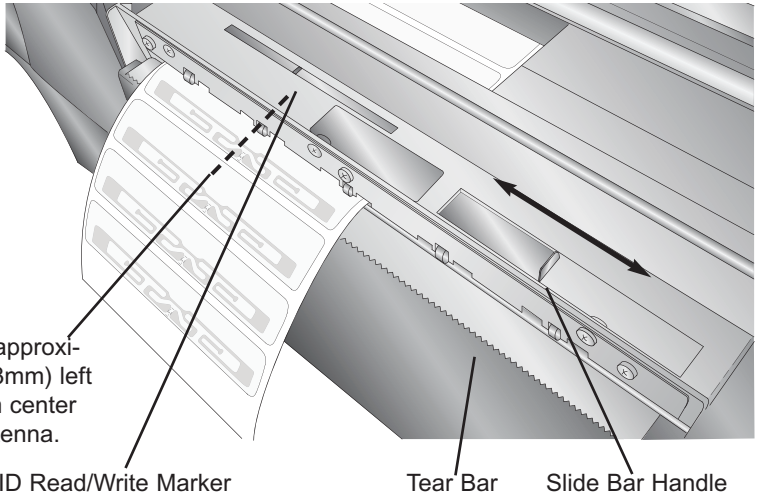

Important Note: *The remaining steps are optional and only necessary if encoding problems are present. If you are loading a new roll with the exact same specifications as the last roll, none of these steps will be necessary.*

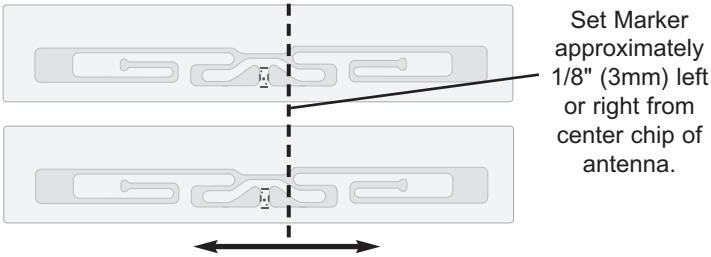

3. Open the PTStatus Monitor to test write to the RFID chip and verify the correct position of the Reader/Writer. Go Start - All Programs - Primera Technology - PTStatus. Click on the RFID tab.

4. Click "Calibrate". PTStatus will automatically calibrate optimal position and Antenna Power. This process may take up to three minutes. During this time the stock position and antenna power are automatically adjusted. After this, ten write and ten verification reads are performed on the same label.

5. Writing Test. If further testing is desired or if the automatic calibration failed you can perform a writing test. Select the Writing Test button to start.

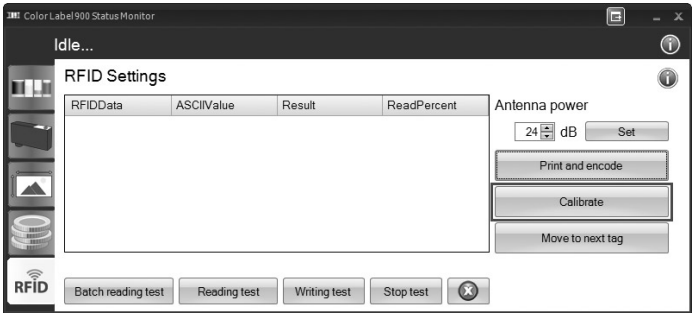

The RX900e will write to the same label continuously until "Stop Test" is selected. The results of each test will be displayed in PTStatus. During this time you can adjust the Slide Bar if necessary until you receive a successful test. If the test is not successful you will see a "Write Failed" error.

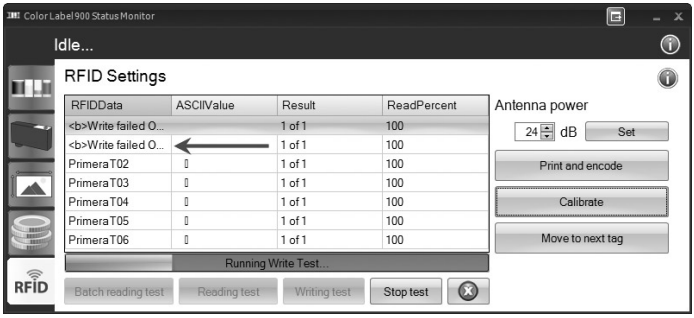

If write failures continue even after adjusting the position of the writer, try adjusting the Antenna Power. First select Stop Test. Now increase or decrease the power using the up and down arrows. Click Set to send the setting to the printer. Try a Writing Test again. After a successful Writing test you may choose to verify the writing by running a reading test on the same label/tag.

B. PRINTING AND ENCODING

Once you have a successful write test, you are ready to print from your RFID equipped software program!

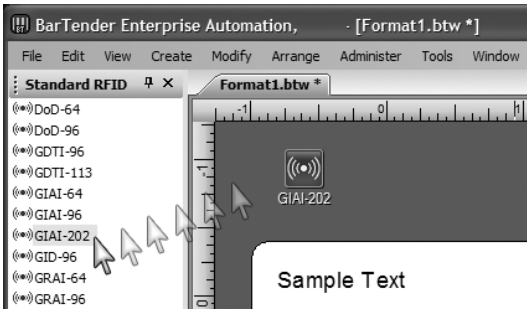

Refer to the printing application's documentation for details on RFID printing. A trial version of Bartender is included on the installation disc. To add RFID encoding to a label design using Bartender, once the label size has been chosen and the blank label is on screen, click the Standard RFID button on the lower left to display all RFID options. Simply drag the desired data format to the area around the label. Double click on the icon that appears to set the data or data source.

Note on Encoding Errors: *During printing from any application if an encoding error appears, the PTStatus monitor will appear and display an error. It will try to encode again after making calibration adjustments. If it fails to encode, by default a series of XXXXs will automatically be printed on the label to indicate that it was not encoded properly. The job will then continue.*

C. OTHER FUNCTIONS

Batch Reading Test. (Optional) After printing and encoding labels you may run a Batch reading test to verify that each label was encoded successfully. Simply load the printed roll, open the status monitor and choose Batch Reading Test on the RFID tab.

Move to next tag. Before reading, writing or calibrating, select Move to next tag to instruct the printer to feed the label stock to the next tag/label.

Print and encode. Use this interface to test printing and encoding. Be sure to set your label size via the printer driver settings accessible in printer preferences as described in Section 5F.

(lower right on RFID tab). Click this to access and advanced encoding interface. This interface will allow you to communicate directly with the RFID module via text commands. Do not use this interface unless directed to do so by tech support.

Advanced Options. Access advanced options by clicking the icon on the top right side of the status monitor. Click the options button. There are several options available. Below are the options that concern RFID encoding.

Print 'XXXX' on RFID Failure. By default a series of XXXXs will automatically be printed on the label to indicate that it was not encoded properly. If you disable this option nothing will be printed on an encoding failure.

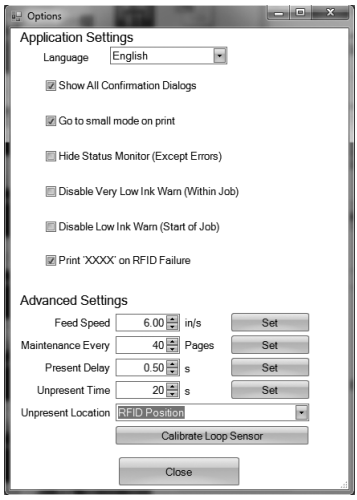

Unpresent Time. This is the time between the finish of the print and when the printer moves the stock back into position for the next encoding/printing. The purpose of this setting is to allow a specific amount of time to remove the label after a one off print.

Unpresent Position. This is the position the label stock moves to after the unpresent time has elapsed. This should be set to RFID Tag when printing and encoding RFID labels.

Section 4: Ink Cartridges (Status Monitor)

PTStatus or Status Monitor is used to interact with the printer for gathering ink levels, maintenance, alignment, cost calculation and several other functions.

PTStatus automatically installs with your printer driver and can be accessed through the printer driver preferences or as a program on your Windows start menu.

1. Connect the printer via USB and turn on the power. The Status Monitor accesses most of the information it uses from the printer itself so the printer must be turned on and communicating for the program to open.
2. Go to Start - Programs - Primera Technology - PTPStatus Once open, the Status Monitor consist of four tabs that are arranged on the left side of the window. Each tab opens a screen that has various similar functions. The tabs will only be displayed if the printer is idle (not printing).
    - Ink Tab (First Tab). Displays ink levels, pauses or cancels a job, displays print counter.
    - Cartridge Utilities Tab (Second Tab). Aligns Print Head, Cleans Print Head and Changes the Cartridges.
    - Alignment Tab (Third Tab). Adjust vertical and horizontal print alignment, Changes the stock sensor mode and toggles the output mode.
    - Cost Tab (Fourth Tab). Calculates cost per label based on last label printed.

In addition to these functions you can also click the icon to access the Primera Knowledgebase, contact tech support, gather version information or set applications options.

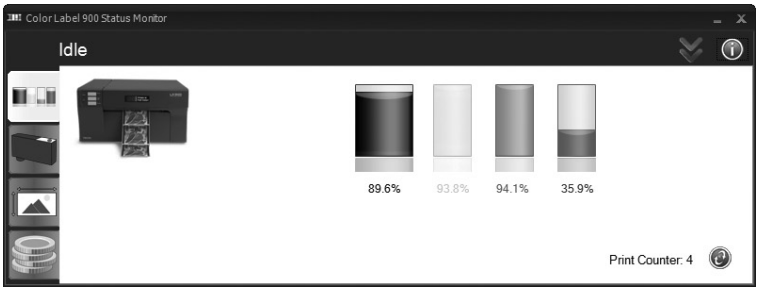

A: MONITORING INK LEVELS

Ink levels can be monitored at any time by using the Status Monitor. Immediately after printing starts the Status Monitor will display the ink levels in the lower right corner of your screen.

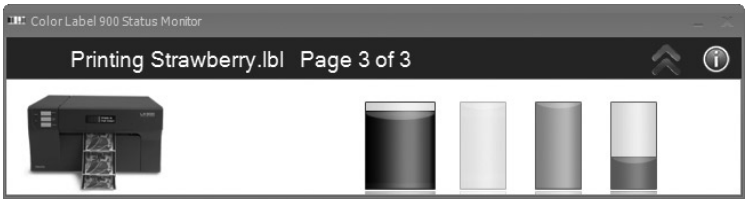

The print status will also be displayed on the top bar. In the example above the label name "Strawberry.lbl" and status "Page 3 of 3" will also be displayed. At any time you may click the double up arrows to expand the window to standard mode. Click the double down arrows to revert to the smaller mode.

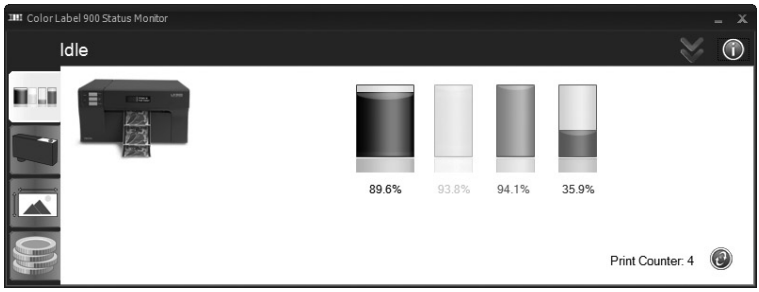

In the standard mode, the ink percentages will be displayed, along with four tabs and the Print Counter. The tabs will only be displayed if the printer is idle (not printing).

Note: *If you are using multiple printers, an instance of the Status Monitor will open for each printer. If the Status Monitor is in small mode, each instance will automatically tile justified to the bottom right portion of the screen. The title of each instance will correspond to the printer name as shown in the Windows printer list.*

B. USING THE COST ESTIMATOR

The cost estimator is found on the last tab of the Status Monitor. The Status Monitor automatically opens as soon as you begin printing. However, you can also access it at any time as long as the printer is turned on and communicating by going to Start - Programs - Primera Technology - PTStatus.

Ink cost is automatically and continuously calculated based on the black and color cartridge costs entered. Only the last printed label cost is displayed. For reference, the print file and date of last print is displayed at the top of the window.

- Adjust the cartridge costs according to the actual price paid for them. The estimate does not take currency into account so you can assume that whatever value you entered is displayed in your currency.
- Save a screen capture of the cost by clicking the disk icon.
- Print a screen capture of the cost by clicking the printer icon.

Important Note: *The cost per label represents the average cost per label over an entire run of labels. This means that the per label cost will decrease and become more accurate as the number of labels printed increases. This is because the ink that is used for beginning and periodic cartridge maintenance is divided into a larger number of labels.*

C. REPLACING INK CARTRIDGES / LOW INK WARNING

You can replace cartridges at any time or wait for the Low Ink Warning to prompt you to replace cartridges. Low Ink Warnings occur at the following levels:

- **10**% - If any cartridge is lower than 10% at the beginning of a job you will be prompted to change that cartridge. At this point you can change or ignore.
- **0**% - If any cartridge reaches 0% during a job you will be prompted to change that cartridge. At this point you can change or ignore. Under normal circumstances this will be your first warning. The 10% warning is only triggered at the start of a job.
- **-10**% - If at any point any cartridge is -10% you will be prompted to change that cartridge. You must change the cartridge to continue.

To change a cartridge, follow this procedure:

1. Press Pause and Load/Feed simultaneously -OR- click the Change Cartridge button on the second tab of the Status Monitor. The head carriage will move to the center of the print area for easy access.

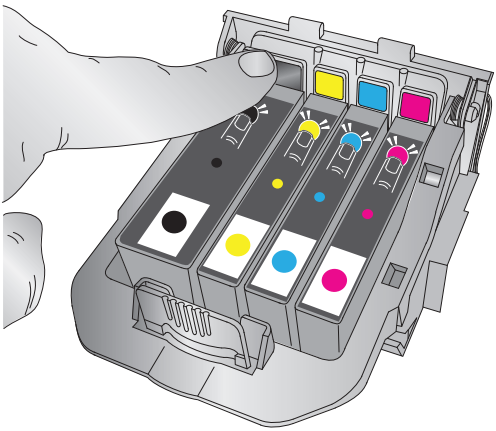

2. Remove the cartridge by pressing the corresponding colored tab on the back of the printhead. The cartridge will pop up slightly.

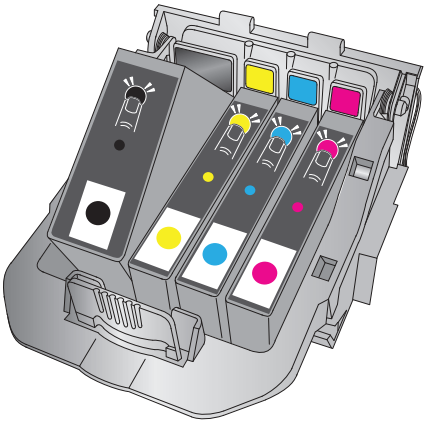

3. Remove the cartridge.
4. Locate a new cartridge and remove it from its packaging. Remove the foil outer package and the clear plastic shrink wrap. Also remove the cartridge cap.

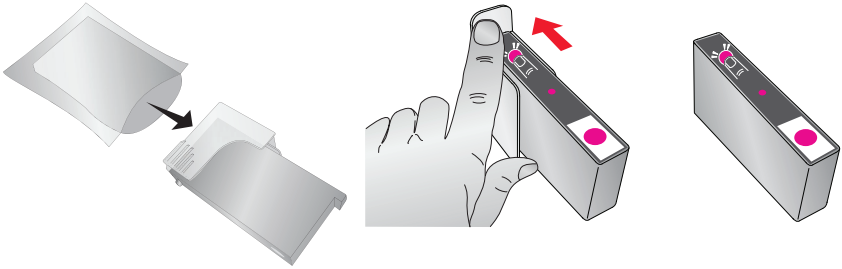

Note: *If you opened a cartridge but are not currently using it you can store the cartridge in the plastic cap shown above to prevent it from drying out.*

5. Place the new cartridge into its corresponding colored slot. Press down near the back of the cartridge until it clicks into position.

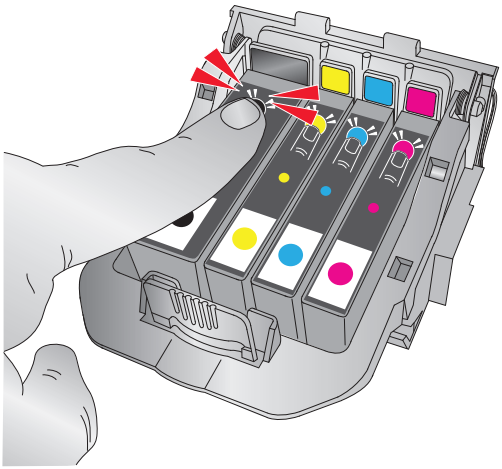

Important Note: *Make sure the cartridge is securely in place. An improperly positioned cartridge will cause no ink of that color to be printed.*

Section 5: Printing

A. USING NICELABEL

Your printer ships with a basic version of Niceware's NiceLabel software. This easy-to-use software is designed to allow you to create full color labels with text and barcodes quickly and simply. The following is a tutorial to guide you through creating and printing a sample label.

Launch NiceLabel from your computer's Start Menu.

Note: *You are not required to print from the NiceLabel software. You can print from any application that prints to a Windows Printer. (Section 4C)*

Creating a Label

1. Click the **New Label Icon** from Main Tool Bar
2. You will see the **Label Setup Wizard**. This will guide you through setting up your label
   a. Set the dimensions of your label and unit of measure and click **Next**.

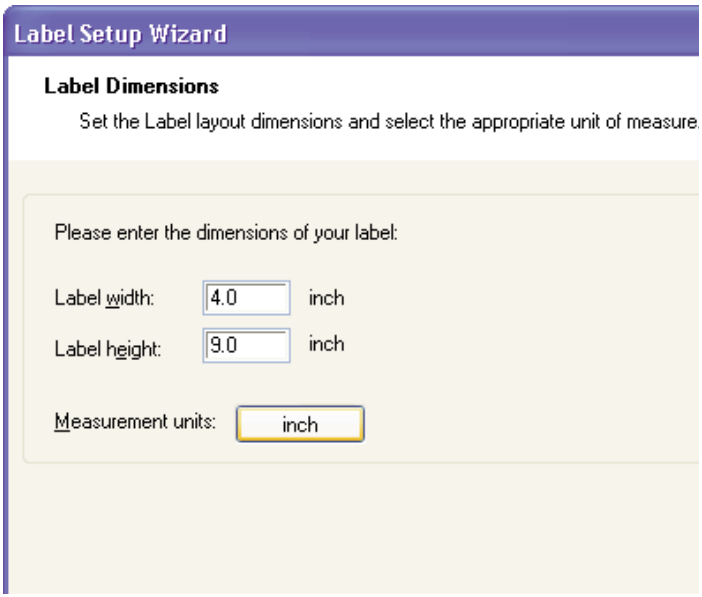

b. Select your printer. This should be the Color Label Printer 900e. Click **Finish**.

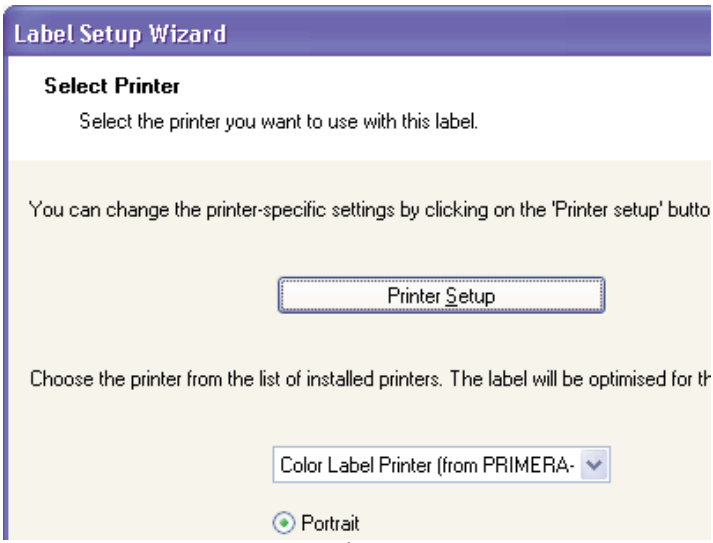

3. Now you will see your label in the Document Window. You can start to design your label using Tools from the Tool Box. First, we will use the Text Tool.

   a. Click the Text Tool Icon in your Toolbox, then move the text cursor over the Document Window and click in the location where you want to enter text. There is no need to be exact, once you enter your text it can easily be resized and/or moved about the label. Upon clicking in the Document Window, you will see a prompt to start typing your text.

   b. When finished typing, click anywhere in the Document Window and you will see the text appear in a box with "edit handles." You can drag and resize the text anywhere in the document window. If the text is dragged off of the printable area, NiceLabel will turn the text red as a warning that it is outside the printable area. This will not change the color of the text inside the printable area.

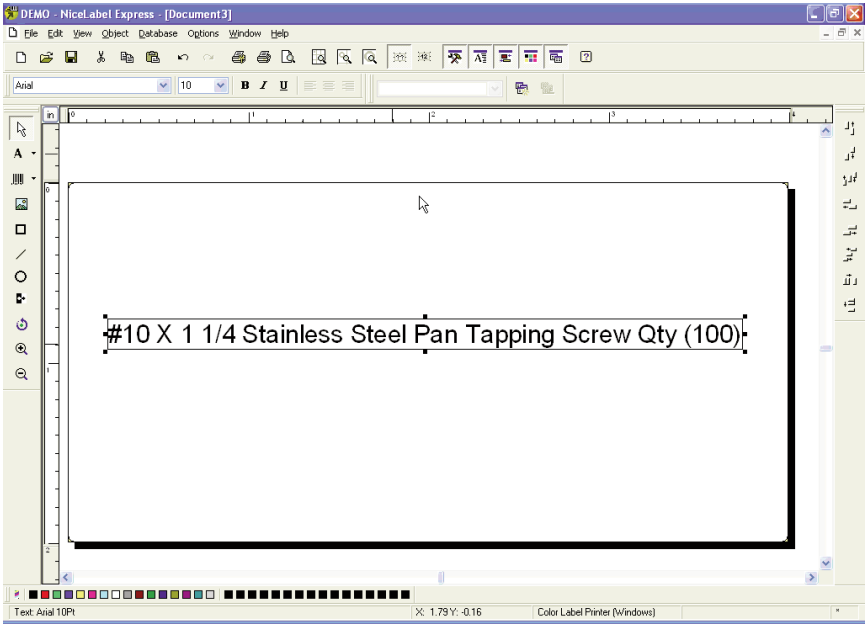

4. Now, insert a barcode.
    a. Click the Barcode Tool Icon from the Toolbox. You will now have a Barcode Cursor that can be positioned anywhere within the Document Window. Position your cursor in the general area where you wish your barcode to print and click to start entering your barcode information. There is no need to be exact, once you create your barcode it can easily be moved and/or resized. Once clicked, you will see the Barcode Wizard.

b. The first screen in the Barcode Wizard will allow you to select the type of Barcode you wish to print. You can also enter the data to be used in the barcode. For this we are doing a simple UPC-A barcode. For more information on other types of barcodes, please see **Section 3B. Creating Barcodes in NiceLabel**.

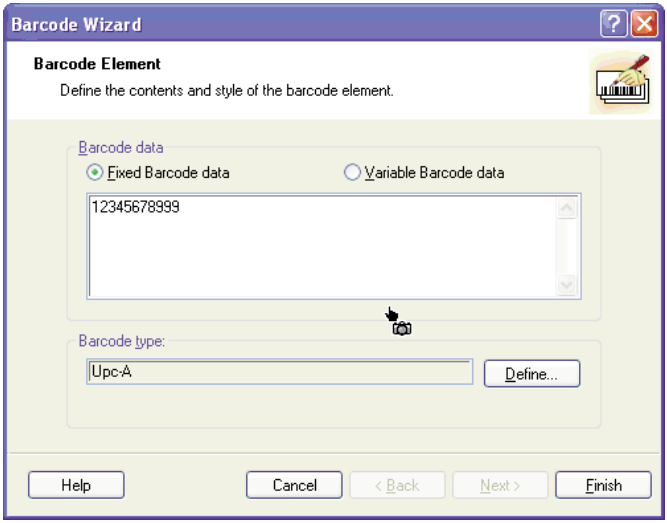

c. Click **OK**, then click **Finish** and your Barcode will be placed on your label with "Edit Handles" to allow you to move and resize your barcode.

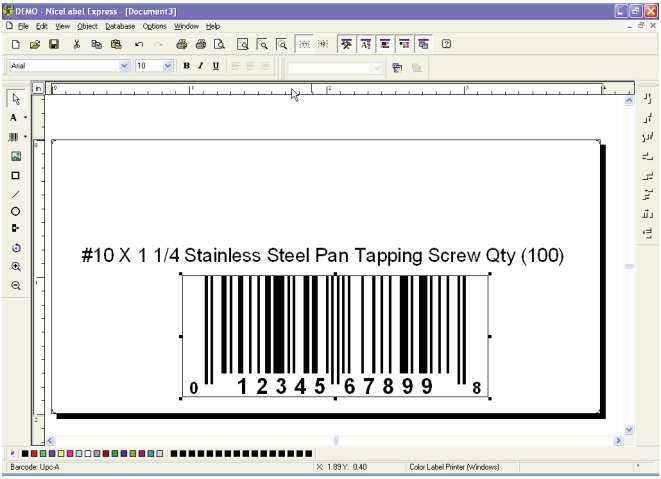

5. Now insert a Picture. Click on the Picture Tool Icon in the toolbox. You will now see a Graphics Cursor. Drag the cursor to the general area where you wish to place the graphic and click to get an Open dialog box. You will be prompted to browse for graphic files.

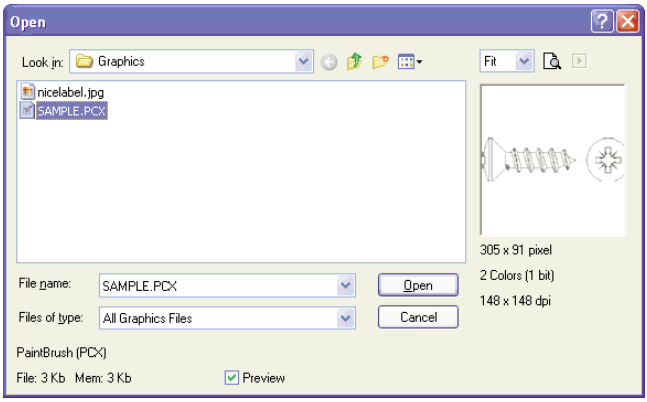

NiceLabel accepted file formats: NiceLabel will accept universal graphic files such as BMP, JPG,TIF, WMF, and PNG. It will not accept AI, PDF, PSD, CDR or any proprietary format from design applications or label layout programs.

Note: *Objects will be layered in the order they are added to your document. There is no ability to change the layering order in the SE version of NiceLabel. This feature is available in upgraded versions.*

a. Click **Open** and the graphic will be imported with edit handles so you can easily move and resize your graphic.

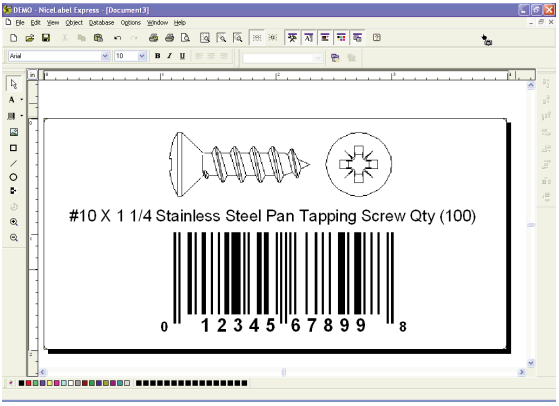

b. There are other tools at your disposal to align the object or add shapes. On the right side of the screen you will see alignment tools so you can align the objects on your label in relation to each other. Select objects by clicking on them or clicking and dragging a "lasso" around multiple objects or by holding down the SHIFT key and clicking on each object individually. You can also center these objects by right clicking on a selected object and choosing **Align** from the drop-down menu. If you wish to center your object on the label choose the appropriate centering options and check the **Align to Label** check-box.

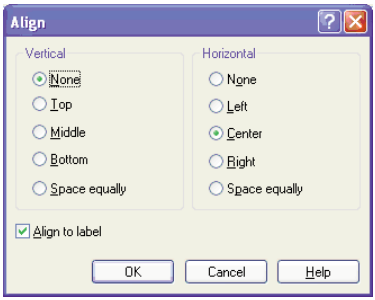

c. You are now ready to print your label. Click **File - Printer Settings** to adjust quality, color matching etc. See Section 3C for more information. Click **File** then **Print** from the main menu. Choose your number of copies and click **OK**.

The following actions will occur during normal operation:

- Approximately every five passes the printhead will quickly move to the far right for cleaning.
- After every label printed the label stock will back up a small amount to line up the printhead with the top of the next label.
- Approximately every 5 labels the label stock will feed forward and then back up a full label so the cartridges can be wiped by the maintenance wiper.
- All jobs of over 200 labels are automatically divided into 200 label blocks in the Color Label 900 printer queue. This is done to speed up the printing process.

Congratulations! You have successfully created and printed your first label. The rest of this section will explain in more detail how to use barcode labels. Also, you can find more tips and hints by simply clicking **Help** then **Contents** in the main menu.

B. CREATING BARCODES IN NICELABEL

a. Click the Barcode Tool Icon from the Toolbox.

b. You will now have a Barcode Cursor that can be positioned anywhere within the Document Window. Position your cursor in the general area where you wish your barcode to print and click to start entering your barcode information. Once clicked, you will see the Barcode Wizard.

i. The first screen in the Barcode Wizard will allow you to select the type of Barcode you wish to print. You can also enter the data to be used in the barcode.

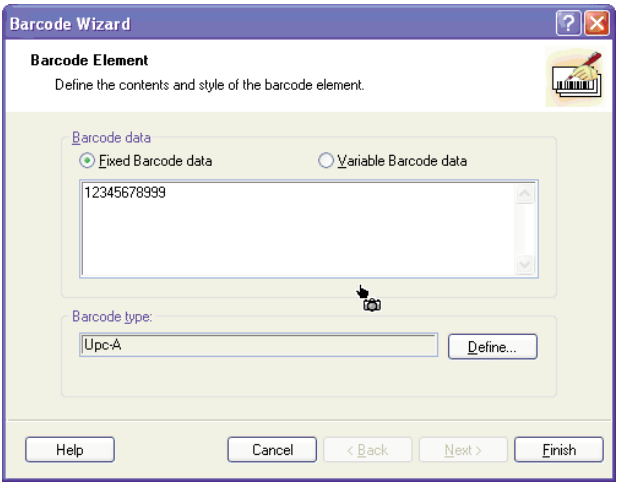

ii. Click **Define** to change the type of Barcode.

iii. This contains four tabs, **General**, **Check Digit**, **Human Readable** and **Details**.

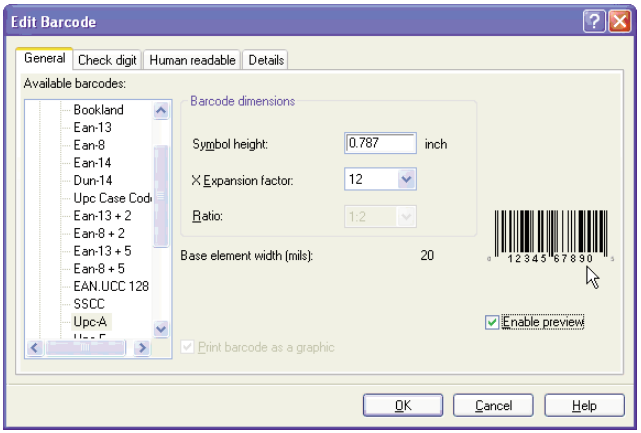

iv. The **General Tab** allows you to choose the appropriate barcode type from the **Available barcodes**: menu.
You can choose one- or two-dimensional barcodes. Note that different barcode types have different requirements - some of them only allow numbers to
be encoded, while others only allow upper case characters. For the further help on the barcode types contact your supplier

Available barcode types are listed here (UPC-A is the most common type used for retail products):

EAN and UPC	EAN-8, EAN-8 + 2-digit supplement, EAN-8 + 5-digit supplement, EAN-13, EAN-13 + 2-digit supplement, EAN-13 + 5-digit supplement, EAN-14, DUN-14, UPC Case Code, UPC-A, UPC-A + 2-digit supplement, UPC-A + 5-digit supplement, UPC-E, UPC-E + 2-digit supplement, UPC-E + 5-digit supplement, EAN.UCC 128, SSCC, Bookland, Addon 2, Addon 5
Linear	Interleaved 2 of 5, ITF 14, ITF 16, Code 39, Code 39 Tri Optic, Code 39 Full ASCII, Code 32, Code 93, CODE 128 (A, B and C subsets), MSI, Codabar, Postnet-32, Postnet-37, Postnet-52, Postnest-62, Kix, Pharmacode
RSS	Linear RSS symbologies RSS14, RSS14 Truncated, RSS14Stacked, RSS14 Stacked Omnidirectional, RSS Limited, RSS Expanded Composite RSS symbologiesRSS14, RSS14 Truncated, RSS14 Stacked, RSS14 Stacked Omnidirectional, RSS Limited, RSS Expanded, UPC-A, UPC-E, EAN-8, EAN-13, EAN.UCC 128 & CC-A/B, EAN.UCC 128 & CC-C
2D Barcodes	2D-Pharmacode, PDF-417, DataMatrix, MaxiCode, Aztec, QR, Micro QR, Codablock F, MicroPDF

Define the barcode dimensions in the **Barcode Dimensions Field**. The height is set in cm by entering the appropriate number in the **Symbol Height Field**. The width of the barcode is set as the **X Expansion factor**. Note that the width can be set only in pre-defined standard steps.

When you change the barcode dimension directly from the screen by moving the drag handle, the changed dimension will also appear in this dialog box.

Some of the barcode types also allow the definition of Narrow-to-wide bar ratio. It can only be set from the predefined steps in the pull-down menu - 1:2, 1:3 or 2:5.

Base element width (mils) is calculated automatically from the X expansion factor.

v. The **Check Digit Tab** will allow you to include a system automated check digits or enter your own. Check digits can be disabled on some barcodes from this tab as well.

vi. The **Human Readable Tab** allows you to manipulate the human readable text printed with your barcode. Here you can disable Human Readable, select position (above or below the barcode), include a check digit, and choose your font type and scaling.

vii. The **Details Tab** allows you to set some further details of the barcode presentations on the printer. These settings are listed here:

Include Quiet Zones will enable the software to automatically create the necessary amount of free space before and after the barcode symbol by drawing an unprintable buffer area around the barcode symbol on the screen.

Descender Bars allows EAN 13, EAN 8, UPC A and UPC E to print longer first, middle and last bars when this option is selected.

Mirror Horizontally will allow the barcode to be printed as a graphic and will so it can be mirrored over the horizontal axis.

Mirror Vertically allows the barcode to be printed as a graphic so it can be mirrored over the vertical axis.

Intercharacter Gap: Some barcodes allow you to change the gap between characters in the barcode (e. g. Code-39). The barcode prints as a graphic.

Include EAN white space: A special character is inserted before and/or after the barcode. It indicates the width of the barcode. If you place any other object in the extent of the barcode, it will reduce the readability of the barcode. This option is valid for EAN barcode types.

C. PRINTING FROM OTHER PROGRAMS

Since this printer uses a standard Windows printer driver you can print from any application you would like. There are just a few things to remember that will make it much easier.

1. **Set the Page/Label Size in the Driver.** NiceLabel auto matically prompts you for the size of the label that you are using. When printing from any other program you must do this manually. Before you print, simply set the custom page size just as you would set print quality in the printing preferences. In the example below the label size is 4" x 4" so the custom page size is set to 400 x 400 (displayed in .01 inch units).

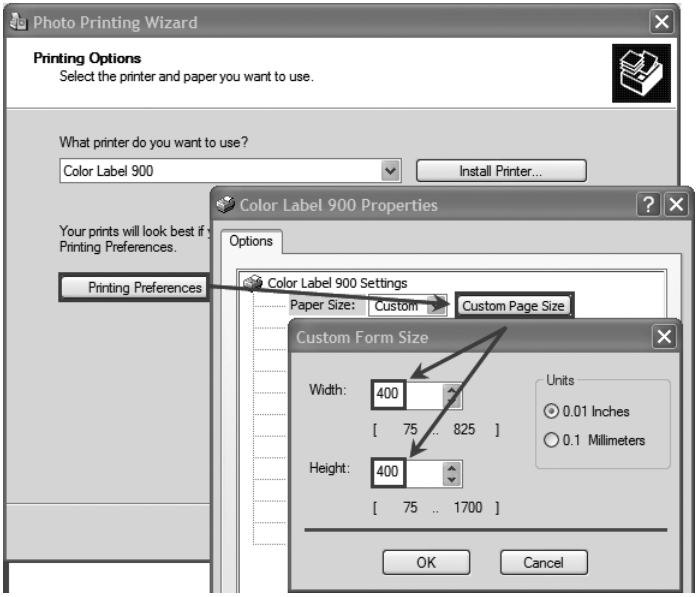

2. **Check the image or document size.** The image size or document size should correspond to the Page/Label Size set in the driver. If you have set your page size to 4" x 4" but you image is actually 5" x 3" the printer driver will automatically shrink your image to fit inside the 4" x 4" label. The result is that the actual printed label is 4" x 2.4". Avoid this by setting your page size or image size to match the label size.

3. **Choose the right printing program.** There are many different applications that are capable of printing to the RX900e. However there are only a few that are ideal printing applications. For example, Adobe Illustrator is an excellent design program but is not always the best printing program. It can be difficult to find the printing preferences or to know the exact size of the art board. It is best to save as a PDF file and print from Adobe Reader or export as a 300 dpi JPG and print from NiceLabel.

D. ADJUSTING PRINT ALIGNMENT

If your previous experience with printing is limited to printing letters and cards to 8.5 inch by 11 inch paper you probably are not familiar with an essential part of a label printing - Print Alignment. Standard printers feed a sheet and start printing based on the start of the sheet. They also prohibit printing to the edge of the sheet. This is to avoid any need for alignment. The RX900e senses the beginning of the label with an optical sensor and is capable of printing to top, bottom, left and right edge. Because of this it is necessary to align the printer to work with specific types of label stock.

The RX900e comes factory calibrated to print exactly to the edge of Primera label stock. However, due to variations in the left margins and other variables it may be necessary to fine tune these settings at the beginning of each roll. This is especially true for other non-Primera brand label stock.

Important Note: *Before adjusting alignment settings first print one label at the quality level you intend for the entire job. This will ensure the label stock is moving at the same speed and the stock sensor will sense the gap in the same way.*

Adjust print alignment using the Status Monitor. Go to the Alignment Tab (third tab).

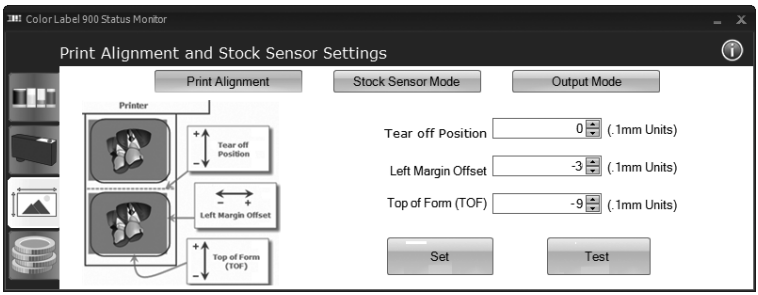

Three items can be adjusted here:

- **Tear off Position.** This value adjusts the position of the last label printed after it has been presented for tear off. This only applies if the output mode is set to "Yes" Present the label. Add to the current value to move the tear point closer to the printer. Subtract from the current value to move the tear point away from the printer. After adjusting the value click the Set button to send the value to the printer.
- **Left Margin Offset.** This value moves the printed label left or right. Add to the current value to move the printed label to the right. Subtract from the current value to move the printed label to the left. After adjusting the value, click the "Set" button to send the value to the printer. Note: Before adjusting this value make sure the label stock is properly loaded so that there is no gap between the edge of the liner and the fixed throat guide. Any gap at this point will greatly affect the Left margin offset value needed to align the label. Also, if you adjust the value with improperly loaded label stock you will have to adjust it again if you load the label stock correctly the next time.
- **Top of Form (TOF).** This value moves the print start position up or down on the label. Add to the current value to move the printed label down or toward the printer. Subtract from the current value to move the printed label up or away from the printer. After adjusting the value click the "Set" button to send the value to the printer.

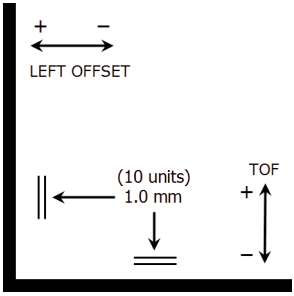

You may have to make several adjustments to one or more of these values. After each adjustment you can click the Test button to print a small test pattern on the label. This will help you find the proper alignment value.

E. CREATING A FULL BLEED PRINT

1. If you are having trouble making the image cover the entire label, first make sure the image is printing at least as big as the label size you have selected. To accomplish this using Nice Label, make the image a few millimeters larger than the label by dragging the image over the edge of the label on all sides. The bounding box around the image will turn red when it is over the edge of the label. Try printing again to see if it covers the entire label. If not, move on to step two.
2. Adjust these settings in the printer driver preferences to create a .05" (1.2mm) overbleed.

   Page Size. Increase the page size width in the driver preferences by .1 inches. Increase the height by .1 inches. If you are using Nice Label, simply change the size under the File Menu - Label Setup. Increase the size of the image to fit the new larger page size. If you are using other graphics programs you will need to change the page size in the application and in the printer driver preferences.

   Left Margin Offset. You must decrease the left margin offset to center the over bleed on the label. If you overbleed by .05" you will need to decrease the Left Margin Offset by 12. This will center the page size increase so there is a .05 inch over bleed on both left and right sides.

TOF. Decrease the Top of form by 10. This will cause the printer to start printing before the label and ensure a fully printed label.

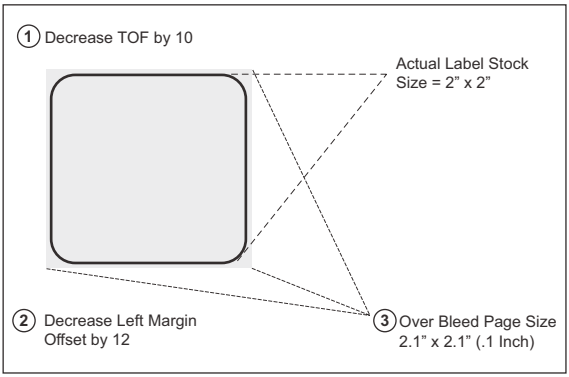

Note: *It is best to over bleed as little as possible to avoid excess ink on the label backing. Also, over bleeding too much will cause the printer to skip labels. This is because the printer stops printing too late to sense the next label.*

F. PRINTER DRIVER SETTINGS

Once the printer driver has been successfully installed, you will need to setup the driver with the appropriate print options. Refer to the following steps to change or verify your default printer driver preferences. These settings will apply to all new designs created in NiceLabel or other programs after the preferences were changed. Existing labels saved in NiceLabel will not be affected since the preferences are saved with the label. To change these preferences you will have to change printer preferences through NiceLabel. (File Menu - Printer Settings)

To find Driver Settings:

Click the **Start** button, choose **Printers and Faxes (XP), Printers (Vista), Devices and Printers (Windows 7)**. Right-click on the Color Label 900e Icon and select Printing Preferences from the drop-down menu.

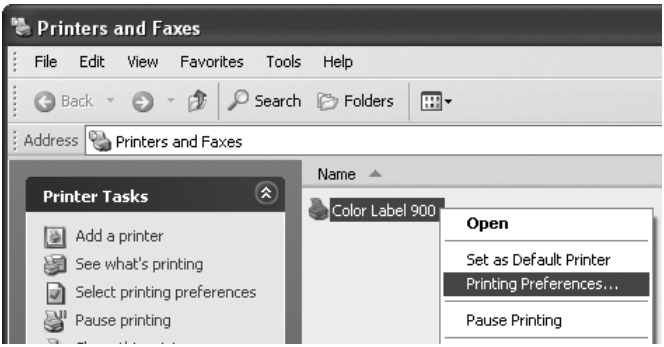

The preferences screen will appear.

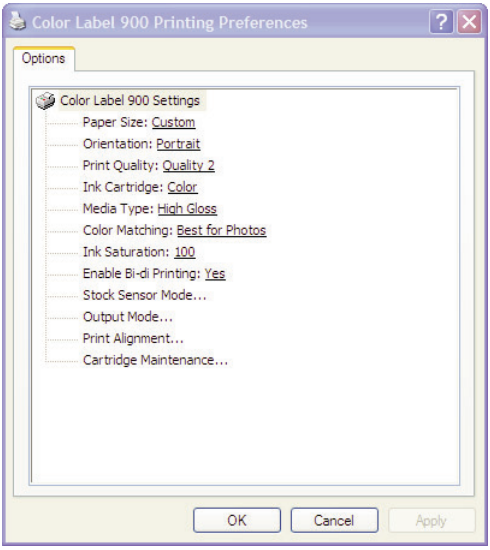

NOTE on PC Settings:

Most applications allow you to change these same printer driver options from their "Print" and/or "Printer Setup" screens. Some applications such as NiceLabel save your settings with the label, others use settings only for the current print job just sent to the printer.

Paper Size

If you are using NiceLabel, this setting is adjusted during the label setup wizard. If you are using a program other than NiceLabel you will need to set this to the dimensions of your label. Keep in mind that the dimensions are always relative to the width and height of the actual label in the printer. Orientation of an image on the label should not change this setting. See Section 2A for minimum and maximum label sizes.

Orientation

There are two settings for orientation, Portrait and Landscape. If your text and graphics print left to right or as shown on the screen, select portrait . If you wish your printing to rotate 90 degrees from what you see on the screen so it is printing horizontally, select landscape as your orientation. Remember, this does not change the width and height Paper Size. It is only a tool for viewing a label upright on screen that will be printed sideways on the printer.

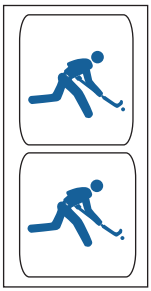

Portrait

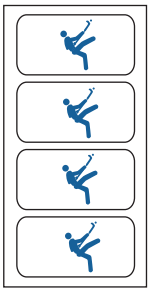

Landscape

Print Quality

There are 4 levels of print quality in the driver. The lower the Quality, the faster the print. Quality 1 provides the fastest print available while Quality 4 provides the best quality. It is recommended that you experiment with the different levels when designing your label to find a good balance between print quality and print speed. Quality 2 is the default.

Ink Cartridge

Color + Black is best for images that have large areas of black graphics or text. Although you can print these same images with just the color cartridge, often the blacks will look darker with this setting.

Color is the default setting and is best for most images. With this setting the printer only uses the color cartridge to produce all colors including gray scale black and white images.

Monochrome Black is for images that have large black areas or black text. This will ensure that no color ink is being used. In some cases printing JPG files using Color + Black for an image that is all black will still cause some color ink to be used.

Monochrome Black is not recommended for gray scale images such as a black and white picture. The ink spits of a black cartridge are not as small as the color cartridge. This allows for faster black printing but at a lower dpi. Using just the black cartridges for such images may result in a grainy image.

Media Type

There are multiple media type options which correspond with the various types of label stock sold by Primera. Match this setting to the media installed in the printer to achieve the closest color match to the screen. Each of these settings employs a slightly different color table developed specifically for the media type listed.

If the printed output is not matching the color on screen, regardless of what media you have installed you can adjust this setting to change the color output. You can experiment with this setting and the color matching setting to adjust the color of the printed image.

Color Matching

Best for Graphics mode is best used for graphical images where accurate color reproduction is not as essential. Images printed in this mode will look more vibrant because more ink is being used to produce them. However, printing images of people may produce skin tones that have a reddish tint.

Best for Photos mode is best used for photographic images where accurate color reproduction is very essential. Images printed in this mode will look lighter than those printed in Photo mode. Skin tones especially will look more natural in this mode.

NOTE: *Exact color matching of the printed labels to the screen may never be possible since there are factors that affect this out of the drivers control. The surface of the label reacts with the ink in the cartridge to produce the color. For this reason, when printing the same image to different types of labels with different surfaces the printed output can look entirely different.*

Ink Saturation

This option controls the amount of ink used when printing an image. The default setting is 100%, which will provide the most accurate color matching. If the ink is not drying fast enough or bleeding, you can decrease the Ink Saturation to lessen the amount of ink that is applied to the label.

Enable Bi-di Printing

This setting defaults to "Yes" for fastest bidirectional printing.

Stock Sensor Mode

Click this setting to open the Status Monitor. See Section 2D

Output Mode

Click this setting to open the Status Monitor. See Section 2E

Print Alignment

Click this setting to open the Status Monitor. See Section 4D

Cartridge Maintenance

Click this setting to Align the Printhead, Clean the Printhead or Change a Cartridge. This setting opens the Status Monitor.

Section 6: Troubleshooting and Maintenance

A. SOLVING PRINT ALIGNMENT PROBLEMS

Image is Vertically Offset

The RX900e decides where to start printing by detecting the start of die-cut label, detecting a black mark on the back or detecting a thru-hole that corresponds to the start of the label.

The following items can cause the label sensor to improperly detect the start of a label:

1. **Top of Form (TOF).** TOF stands for Top of Form and this setting allows you to fine tune the alignment of your printing on your label stock. This will be factory calibrated. If fine tuning is needed, increase this setting to move the image down on the label; decrease this setting to move the image up on the label. The unit of measure is 0.1mm. This setting is found on the Alignment Tab of the PTStatus Monitor.

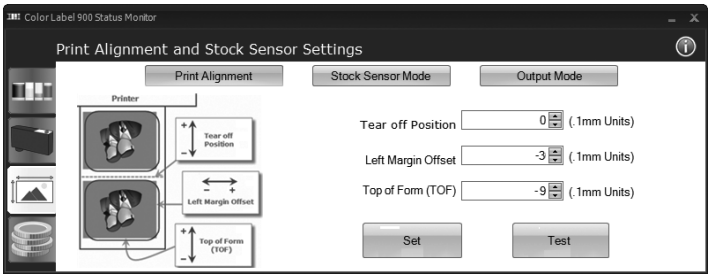

2. **Nonstandard / Non-translucent Backing Material**. Test the unit with the label sample material that came with the unit. If it prints correctly, your label stock may not be compatible. The label sensor needs to see the difference between a label and a backing material by seeing through the label stock for light variations. If it can not see through the label, problems will arise. If you must use this type of backing, try label stock that has a black mark on the back to show where the label begins. You will need to change the Stock Sensor Mode in the Status Monitor.

3. **Insufficient Label Gap Distance.** See Section 2A for label specifications.
4. **Page Size is Bigger than Label Stock Size.** If the page size set in the driver is larger than the actual label stock, ink will be printed on the gaps and the sensor will start looking for a gap too late. This can cause label skipping or inconsistent print starting points.
5. **Portrait / Landscape.** If the Portrait / Landscape setting does not correspond to the label stock installed this will also cause the printer to print over the gap and onto the next label. Make sure this is set correctly.
6. **Stock Sensor Position.** Circular, nonstandard label shapes or multiple labels across will require precise adjustment of the label sensor. If you are using circular or other non rectangular die-cut labels see Section 2C for instructions.

The image is printing horizontally offset

Three things can affect this issue.

Label Stock Loading. It is very important to correctly load the label stock so that there is no space between the throat guides and the label liner edge. If there is a gap between the throat guides and the label stock it may "walk" back and forth causing inconsistent horizontal printing. See section 2B for label stock loading instructions and tips.

Left Margin Offset. This adjustment is found on the Alignment tab of the PTStatus monitor. See Section 4D.

Page Size. Often the page size is not large enough for the label. If this is the case you may see white space on the right (printers left) side of the the label and no image over-lap on

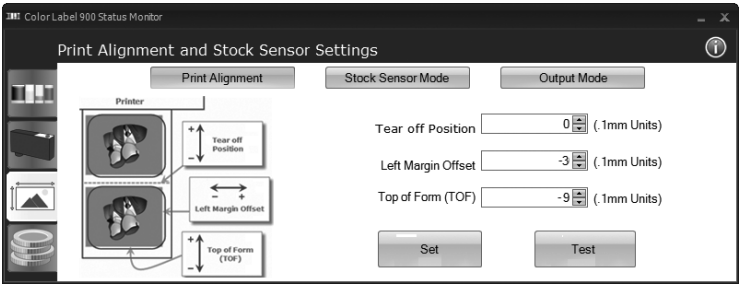

the opposite side. This indicates that the page size needs to be increased. Increase the page size through the printer preferences enough to cover the label.

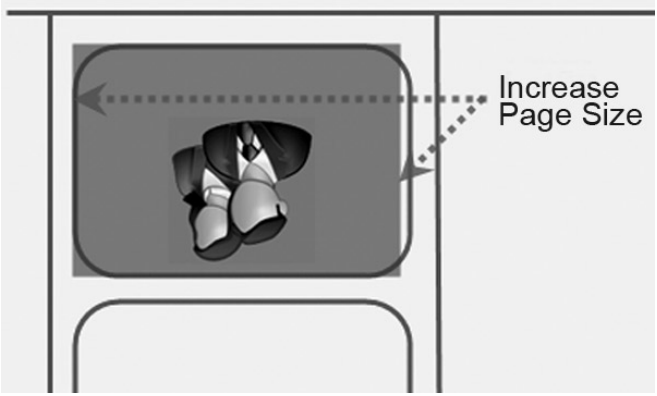

B. SOLVING PRINT QUALITY PROBLEMS

Many factors can affect the quality of the print. The following are listed in order from most likely to least likely:

1. **Quality Setting.** Change your quality setting. The lowest (and fastest printing) quality may not be sufficient for many photos or graphics. The highest quality setting may cause ink to bleed on certain graphics in combination with certain label stock. Increasing the quality increases print time because the printer makes more horizontal movements across the label.
2. **Clean the Printhead.** Run an automatic printhead cleaning print or manually clean the printhead as described in Section 5F .
3. **Change Cartridge.** Try a new cartridge. Make sure that the ink cartridge has ink remaining. Check the ink levels via the Status Monitor.
4. **Align Printhead.** Normally, printhead alignment is only necessary after changing a printhead. However, in certain cases, running the alignment again can improve print quality. Align the printhead by opening the PTStatus Monitor. Click on the Align Printhead button on the Cartridge Utilities Tab (second tab). Follow the onscreen prompts to load your paper for alignment.

5. **Clean the Maintenance Station.** Clean the maintenance station located on the right side of the print area. This includes the rubber cartridge nozzle cap and the plastic squeegee. Under normal use this can become dirty with ink. Clean with rubbing alcohol and a paper towel.

6. **Color Matching.** Change your Color Matching setting to Graphics or Photos via the printer driver preferences. See Section 4F.

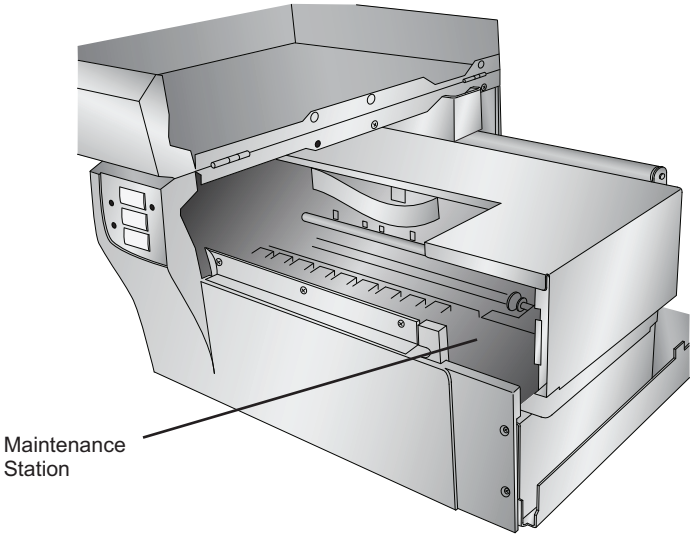

7. **Cartridge Setting.** Change the cartridge setting in the driver. Try Color + Black or Color only. To change the cartridge setting, right click on the printer in the Printers and Faxes area - choose preferences -click cartridge - set it to Color + Black or Color. Color only will still print black, but will use the color cartridge to print it. We recommend "Color" only for the best possible quality on photographic images with small amounts of black. If your image has large areas of black text, graphics or barcodes, we recommend Color + Black for the best quality.

8. **Media.** Make sure your label stock is inkjet printable. Many thermal label stocks look the same as inkjet but do not allow the ink to soak into the surface of the media.

9. **Source File Image Mode.** The image mode of the source file may be set to RGB instead of CMYK. This can cause the color matching to be off. Change the image mode of the original file, resave and reprint.
10. **Copper Contacts.** Clean the copper contacts on the back of the print carriage and the contacts on the printhead with rubbing alcohol.
11. **Image Resolution (DPI).** Try another Image. Perhaps the resolution of the current image is not sufficient for a quality print. Many graphics suitable for viewing onscreen have a DPI of 72. This is the minimum DPI for proper screen display. However, if you print this image it will look blurry and pixilated. 72 is a typical DPI for images or graphics saved from web sites. We recommend a 300 dpi image.
12. **Cable.** Try another USB cable. Make sure that it is less than 6ft (2 Meters) long. Faulty cables or cables that are too long interrupt communications which can result in print quality issues.
13. **Saturation.** If ink is bleeding, decrease saturation in driver preferences.
14. **Change the Printhead.** If print nozzles of certain colors are still clogged after repeated cleanings it may be time to replace the printhead. See Section 5G.

C. COLOR MATCHING AND DESIGN TIPS

Whether you contract your graphic design or do it yourself, these guidelines will help you get the best quality labels out of your RX900e.

1. **Image Size/Shape.** The image size should correspond with the size of the label you will be printing. Note: If the source image is smaller and must be enlarged to fill the entire label space, this will affect the DPI. A 2" x 2" 300 dpi label blown up to fit on a 4" x 4" label would have an effective dpi of 75. This would not be a sufficient resolution. See item 2.
2. **Resolution.** Resolution is measured in dots per inch or dpi. 300 dpi is sufficient to get the best possible quality from most images. A 72 DPI image will look fine on screen but

WILL NOT print well. Graphics and logos found on websites are typically 72 DPI. The image below was printed from a 72 DPI image. Notice the jagged edges. Remember, print quality settings found in the label printer driver will have no effect on improving a low dpi source image.

On the other hand, resolutions higher than 300 DPI will not produce better quality but may require more RAM to print and hard drive space to store. They could even slow down the print process.

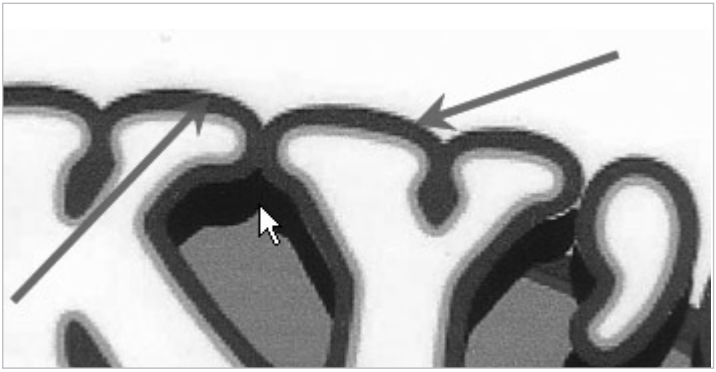

72 DPI Image printed with the RX900e

3. **Image File Format.** Most graphics are created in a graphic application. Since this graphic application is not usually on the same computer as the label printer doing the printing, it is necessary to export the graphic into a universal format that can be read by other programs. We recommend TIF and BMP files for graphics. These formats are uncompressed. JPG files also work well for graphics that include photographs. All three formats can be imported into the NiceLabel application.
4. **Color Mode.** Set the color mode in the source graphic application to CMYK. In most cases this will produce the most accurate color reproduction of the image on screen.

However, if CMYK is not producing the desired color matching try changing the source image to RGB and then exporting the image again in one of the universal formats mentioned above.

Note: *Often it is useful to request that your graphic designer provide you with several different formats for you to try printing. For example you could request your image in six different formats: A JPG, BMP, and TIF in RGB color mode and a JPG, BMP and TIF in CMYK color mode.*

5. **Media Type Setting.** Experiment with the Media Type setting in the printer preferences (Section 4F) to achieve the best color matching. There are multiple media type options which correspond with the various types of label stock sold by Primera. Match this setting to the media installed in the printer to achieve the closest color match to the screen. Each of these settings employs a slightly different color table developed specifically for the media type listed.

   If the printed output is not matching the color on screen, regardless of what media you have installed you can adjust this setting to change the color output.

   If you are still not getting the correct color output, the graphic designer may need to change the color values of the source graphic to achieve the proper print output.

D. CREATE A SUPPORT REPORT

If you are encountering any problems with you RX900e tech support may ask you to create a Tech Support Report. You can do this from the Status Monitor by clicking the "i" icon and clicking Create Report… A zip file will be create on your desktop.

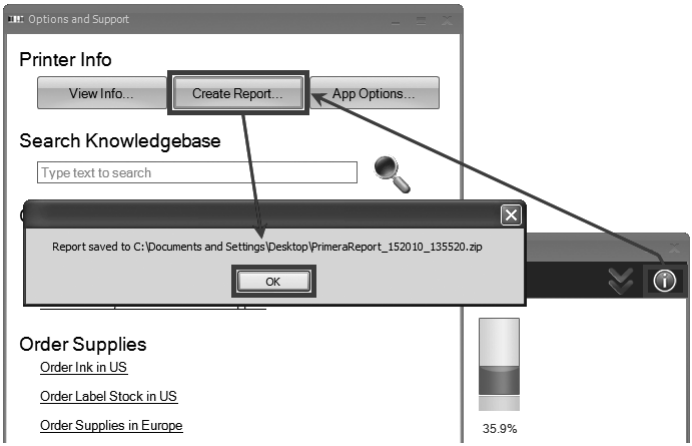

E. CLEANING THE PRINTER

If any ink has gotten on to the printer casing itself, the case of the printer can be cleaned with an ammonia based window cleaner and a lint-free cloth.

Over time, ink overspray may gather at the base of the printer. The printer is designed using a vacuum system to gather most of this ink on a series of saturation pads. Eventually, these pads may need to be replaced. Contact tech support to determine if pad replacement is necessary.

F. CLEANING THE PRINTHEAD

It may be necessary to clean the print head nozzles if you notice reduced print quality, or if you suspect a nozzle has become slightly dried out or clogged. If the printer has been switched off for several weeks you may have to perform both the automatic and manual method multiple times.

Tips:

1. The RX900e will automatically do periodic print head maintenance to keep it ready for printing. However, this will only occur if you leave it plugged in and turned on.
2. Purchase a backup print head to maintain uniterrupted printing capability. Part Number 053450.

Automatic method:

1. Open the PTStatus monitor.
2. Click Clean printhead on the Cartridge Utilities Tab (second tab).

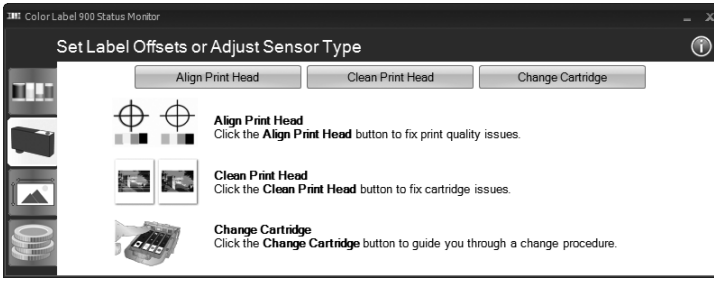

3. Follow the onscreen prompts. You will need a sheet of paper for this process.

Important Note: *Always perform multiple Automatic cleans before attempting to manually clean the print head. Manually clean the print head as a last resort. The nozzles on a print head are extremely delicate, manually cleaning can actually cause damage to a print head.*

Manual method:

1. Remove the printhead using the instructions in Section 5G.
2. Moisten a lint-free cloth with water.
3. Hold the cloth against the nozzles for three seconds. This will "wick" some additional ink onto the damp cloth.
4. Wipe in one direction only.
5. Repeat the process until all colors appear evenly on the cloth.
6. Finally, clean the copper contacts on the back of the printhead and on the carriage.

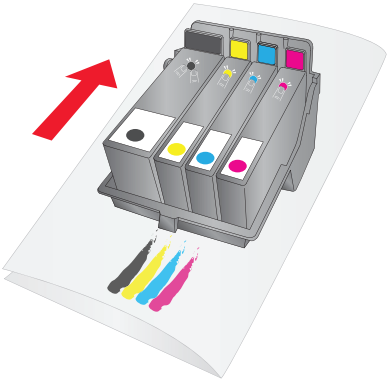

G. REPLACING THE PRINTHEAD

Regular replacement of the printhead is not necessary. However it may become necessary if you notice a gradual decrease in print quality or if some of the print nozzles are still clogged after repeated manual cleanings as described in Section 5F.

Follow this procedure:

1. Press the Pause and Load/Feed buttons simultaneously to move the print carriage to the center of the print area.

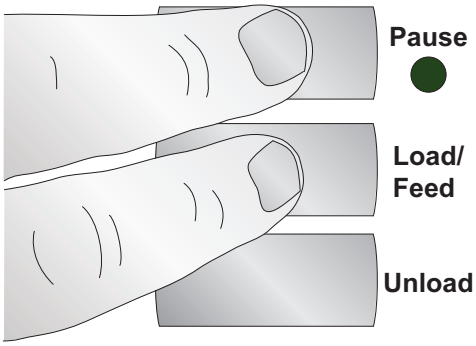

Press Pause + Load/Feed to Start and Finish.

2. Remove all cartridges. Press the release tab at the front of the carriage to release the latch.

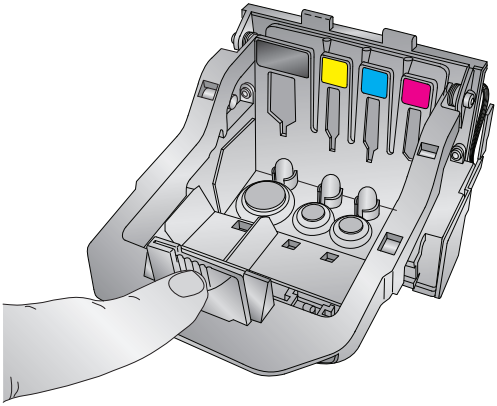

3. Remove the printhead. Grasp the printhead near the back as shown in the illustration.

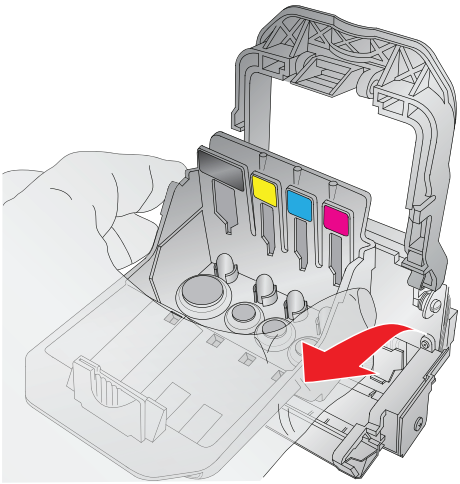

4. Locate a new printhead and place it in the carriage.

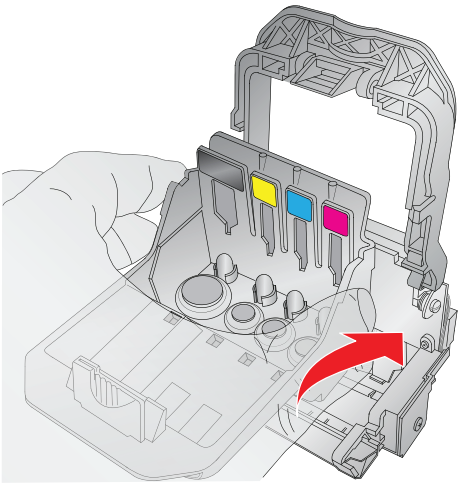

5. Close the latch until you hear a click.

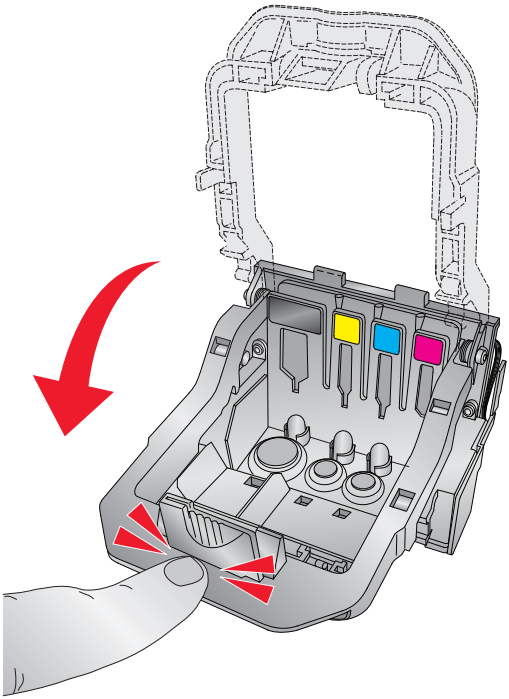

6. Press the Pause and Load/Feed buttons simultaneously to move the print carriage back to normal position.

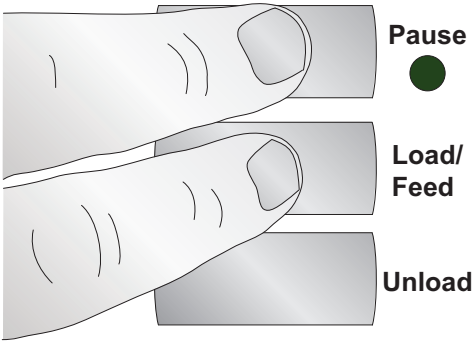

Press Pause + Load/Feed to Start and Finish.

7. Now align the print head as described in Section 5B.

H. INTERPRETING THE PRINTER'S INDICATOR LIGHTS

Most error messages will appear on your computer screen via the Status Monitor application. However, if the error prevents communication with the computer the LED lights may be used to help diagnose the problem.

LED	Explanation
Intermittent Flashing Pause	Printer is doing maintenance. Appears during start up or after a cartridge change.
Slow Flashing Power	Missing Label Stock.
Solid Power Light	Power is on.
Rotating Ink, Power and Pause LEDs	Firmware update is in progress - do not remove power or USB

I. TECHNICAL SUPPORT

If you have difficulties in operating your Printer, the procedures in this manual and the software User's Guide should, in most cases, solve the problem. If you still have difficulty, contact the technical support number using one of the methods listed below.

Source	**Location**
Primera Knowledge Base	www.primera.com/knowledgebase.html
NiceLabel Software Help files	Open the software. Click on the **Help Menu - Contents**
Email Support	support@primera.eu
Chat Support	www.primera.com/knowledgebase.html
Phone Support	+49 (0) 611 92777-0 (Mon - Thu 9 a.m. - 5 p.m., Fri 9 a.m. - 3 p.m. CET)

Section 7: Technical Specifications

Print Method:	Thermal inkjet with Primera Imaging Perfection enhancements
Print Resolutions:	Up to 4800 DPI
Print Speeds:	Draft Mode: 4.5" per second Normal Mode: 1.8" per second High Quality Mode: 0.8" per second
Print Head:	Semi-permanent, user-replaceable
Ink Tanks:	Individual ink cartridges for Cyan, Magenta, Yellow and Black
Colors:	16.7 million
Color Matching:	Z-Color™ Color Matching Software
Max. Print Width:	8.25" (209.5mm)
Media Width:	8.375" (212mm)
Media Types:	Roll-fed pressure-sensitive labels, roll-fed tags, fan-fold labels or tags
Media Sensing:	Moveable see-through sensor for die-cut labels; reflective sensor for labels and tags with black stripe; can use continuous and pre-printed labels and tags
Supply Roll:	6" (152mm) maximum diameter on 3" (76mm) core
Ink Level Warning:	Calculates actual number of prints remaining based upon ink usage of graphics being printed (patent-pending)
Indicator Lights:	Power, Pause, Ink
Controls:	Pause, Feed, Unload
Operating Systems:	Windows XP®, Vista® and Windows 7 Data Interface: USB 2.0; External Control Port
Label Design Software:	NiceLabel™ SE Primera Edition included. Can also be used with most other popular label design and graphics software programs
Electrical Rating:	12VDC, 5.0A
Power Requirements:	100-240VAC, 50/60 Hz, 60 watts
Certifications:	UL, UL-C, CE, FCC Class B
Weight:	36.5 lbs. (16.6 kg)
Dimensions:	17.25"W x 9.1"H x 17.25"D (438mmW x 231mmH x 438mmD)

Section 8: Notices and Warnings

Notices: The information in this document is subject to change without notice. NO WARRANTY OF ANY KIND IS MADE WITH REGARD TO THIS MATERIAL, INCLUDING, BUT NOT LIMITED TO, THE IMPLIED WARRANTIES OF MERCHANTABILITY AND FITNESS FOR A PARTICULAR PURPOSE. No liability is assumed for errors contained herein or for incidental or consequential damages in connection with the furnishing, performance, or use of this material. This document contains proprietary information that is protected by copyright. All rights are reserved. No part of this document may be photocopied, reproduced, or translated into another language without prior written consent.

Trademark Acknowledgments: Windows is a registered trademark of Microsoft Corporation. All other trademarks are the property of their respective owners.

Printing History
Edition 1.0, #280711, Copyright 2011, All rights reserved.

FCC Compliance Statement: This device complies with part 15 of the FCC rules. Operation is subject to the following two conditions: (1) this device may not cause harmful interference, and (2) this device must accept any interference received, including interference that may cause undesired operation.

For Users in the United States: This product is intended to be supplied by a UL listed Direct Plug-In Power Supply marked "Class 2"or a UL listed ITE Power Supply marked "LPS" with output rated 12VDC, 4.5A or higher. This equipment has been tested and found to comply with the limits for a Class A digital device, pursuant to Part 15 of the FCC Rules. In a domestic environment this product may cause radio interference, in which case the user may be required to take adequate measures. This equipment generates, uses, and can radiate radio frequency energy and, if not installed and used in accordance with the instructions, may cause harmful interference to radio communications. However, there is no guarantee that interference will not occur in a particular installation. If this equipment does cause harmful interference to radio or television reception, which can be determined by turning the equipment off and on, the user is encouraged to try to correct the interference by one or more of the following measures:

- Re-orient or relocate the receiving antenna.
- Increase the separation between the equipment and receiver.
- Connect the equipment into an outlet on a circuit different from that to which the receiver is connected.
- Consult the dealer or an experienced radio/TV technician for help.

Use of shielded cables is required to comply with the Class B limits of Part 15 of the FCC Rules. You are cautioned that any changes or modifications not expressly approved in this manual could void your authority to operate and/or obtain warranty service for this equipment.

For Users in Canada: This digital apparatus does not exceed the Class B limits for radio noise for digital apparatus set out on the Radio Interference Regulations of the Canadian Department of Communications. Le present appareil numerique n'emet pas de bruits radioelectriques depassant les limites applicables aux appareils numeriques de la class B prescrites dans le Reglement sur le brouillage radioelectrique edicte par le ministere des Communications du Canada.

Product Disposal
Do not dispose of the printer or supplies in the same manner as normal household waste. Consult your local authorities for disposal and recycling options.

Battery Notice
This product contains Perchlorate material. Special handling may apply.
For more information, go to http://www.dtsc.ca.gov/hazardouswaste/perchlorate/

CAUTION!
TO PREVENT FIRE OR SHOCK HAZARD, DO NOT EXPOSE THE UNIT TO RAIN OR MOISTURE. TO REDUCE THE RISK OF ELECTRIC SHOCK, DO NOT REMOVE EXTERIOR PANELS. NO USER-SERVICEABLE PARTS INSIDE. REFER SERVICING TO QUALIFIED SERVICE PERSONNEL. OPERATE THE UNIT WITH ONLY THE PROPER ELECTRICAL SPECIFICATIONS AS LABELED ON THE PRINTER AND AC ADAPTER.

CAUTION!
USE OF CONTROLS OR ADJUSTMENTS OR PERFORMANCE OF PROCEDURES OTHER THAN THOSE SPECIFIED HEREIN MAY RESULT IN HAZARDOUS RADIATION.

CAUTION
RISK OF EXPLOSION IF BATTERY IS REPLACED BY AN INCORRECT TYPE. DISPOSE OF USED BATTERIES ACCORDING TO THE INSTRUCTIONS.

Radiation Exposure Statement

WARNING:
This equipment complies with International Commission on Non-Ionizing Radiation Protection (ICNIRP), IEEE C95.1, Federal Communications Commission Office of Engineering and Technology (OET) Bulletin 65, Canada RSS-102, and CENELEC limits for exposure to radio frequency (RF) radiation. Use of antennas and accessories not authorized may void the compliance of this product and may result in RF exposures beyond the limits established for this equipment.
When installing and using this product, a 20-cm passing distance must be maintained from the body or head of the user or nearby persons and the antenna. The antenna must not be touched during transmitter operation.

Index

Align Printhead 47
Alignment Tab 14, 21
Antenna 17
Barcode Wizard 29, 33
Bidirectional 44
Black Mark 7, 13
Cartridge Utilities Tab 21, 48, 53
Circular Labels 12
Color Matching 43, 48, 49
Continuous Stock 15
Cost Estimator 23
Cost Tab 21
Die Cut 14
DPI 43, 49, 50
Fixed Throat Guide 38
Full Bleed 39
Human Readable Tab 35
Ink Low LED 3
Ink Saturation 44
Ink Tab 21
Installing Label Stock 9
Label Cost 23
Label Size 19, 36
Label Tear Bar 3
Left Margin Offset 7, 38, 39, 46
Load/Feed Button 3
Low Ink Warning 24
Media Type 43, 59
Movable Throat Guide 10
NiceLabel accepted file formats 31
Orientation 42
Output Mode 15
Power LED 3
Present Labels 16
Print Alignment 21, 37, 45
Print Counter 21

Print Quality 42, 47
Printer Driver Settings 40
Printhead
    Aligning.....47
    Cleaning 47, 53
    Replacing.....49
Printing.....19, 27, 36
PTStatus.....14, 21
Resolution 49, 50
RFID 17
Sensor Type.....15
Sensor Position 11, 46
Status Monitor 21
Reflective 7, 14
Roll Arm 10
Roll Guide 9
Roll Specifications.....6, 8
Roll Stop 10
Tear Off Position.....38
TOF.....12, 38, 45
UPC-A.....30
Unload Button 3
Using NiceLabel 27

P/N 511287