SG2 MUTING

Instruction Manual

ORIGINAL INSTRUCTIONS (ref. 2006/42/EC)

Datalogic Automation S.r.l.
Via Lavino, 265
40050 - Monte S. Pietro
Bologna - Italy

"SG2 MUTING" Instruction Manual

Ed.: 02/2014 rev.A

© 2012-2014 Datalogic Automation S.r.l. ◆ ALL RIGHTS RESERVED. ◆ Protected to the fullest extent under U.S. and international laws. Copying, or altering of this document is prohibited without express written consent from Datalogic Automation S.r.l.

Datalogic and the Datalogic logo are registered trademarks of Datalogic S.p.A. in many countries, including the U.S.A. and the E.U.

All brand and product names mentioned herein are for identification purposes only and may be trademarks or registered trademarks of their respective owners.

Datalogic shall not be liable for technical or editorial errors or omissions contained herein, nor for incidental or consequential damages resulting from the use of this material.

03/02/14

ZERTIFIKAT ◆ CERTIFICATE ◆ 認証証書 ◆ СЕРТИФИКАТ ◆ CERTIFICADO ◆ CERTIFICAT

CERTIFICATE

No. Z10 09 06 70800 001

Holder of Certificate: **DATALOGIC AUTOMATION S.p.A.**
Via Lavino 265
40050 Monte S. Pietro
ITALY

Factory(ies): 42941

Certification Mark:

Product: **Electro-Sensitive Protective Equipment**
Safety Light Curtain (Type 4)

Model(s): **SG 4-Series**
For nomenclature see attachment

Parameters:

Supply Voltage:	24 ±20% Vdc
Resolution:	14mm, 30mm
Operating distance 14mm:	0,2m...6m
Operating distance 30mm:	0,2m...19m
Operating temperature:	-10....+55°C
Storage temperature:	-25..+70°C
Protection class:	IP65

Tested according to:
98/37/EC Machinery Directive
(valid until 29. Dec. 2009)
2006/42/EC Machinery Directive
(valid from 29. Dec. 2009)
EN 61496-1:2004
IEC 61496-2:2006
EN 50178:1997
EN 55022:2006

The product was tested on a voluntary basis and complies with the essential requirements. The certification mark shown above can be affixed on the product. It is not permitted to alter the certification mark in any way. In addition the certification holder must not transfer the certificate to third parties. See also notes overleaf.

Test report no.: 717502006

Valid until: 2014-12-29

Date, 2009-07-03

365103

CONTENTS

GENERAL VIEW ..... **vii**
LED DESCRIPTION vii

1 GENERAL INFORMATION **1**
1.1 General Description 1
1.1.1 General Description of the safety light curtains 1
1.1.2 Package Contents 3
1.2 New features compared to SG2-B/E 3
1.3 How to Choose the Device 4
1.3.1 Resolution 4
1.3.2 Controlled height 5
1.3.3 Minimum installation distance 6
1.4 Typical Applications 8
1.5 Safety informations 8

2 INSTALLATION **9**
2.1 Precautions to be observed for the choice and installation 9
2.2 General Information on Device Positioning 10
2.2.1 Minimum distance from reflecting surfaces 11
2.2.2 Distance between homologous devices 12
2.2.3 Emitter and Receiver Orientation 15
2.2.4 Use of deviating mirrors 15
2.2.5 Checks after first installation 16

3 MECHANICAL MOUNTING **18**

4 ELECTRICAL CONNECTIONS **20**
4.1 Notes on connections 22

5 ALIGNMENT PROCEDURE **25**

6 FUNCTION SETTING **27**
6.1 Reset to Factory configuration 27
6.2 Function List 28

7 FUNCTIONS **30**
7.1 Restart mode 30
7.2 Test 32
7.3 Reset 33
7.4 EDM 33
7.5 EDM SELECTION 35
7.6 Reduction range 35
7.7 Muting 36
7.7.1 Muting function disable 37
7.7.2 Muting signalling devices 37
7.7.3 Typical muting application and sensor connection 37
7.7.4 Muting direction 37
7.7.5 Muting timeout 40
7.7.6 Partial muting 41

7.8 Override 42
7.8.1 Override mode 43
7.8.2 Override timeout 44

8 DIAGNOSTIC 45
8.1 User interface 45

9 PERIODICAL CHECKS 48
9.1 GENERAL INFORMATION AND USEFUL DATA 48
9.2 WARRANTY 49

10 DEVICE MAINTENANCE 50
10.1 Product disposal 50

11 TECHNICAL DATA 51

12 LIST OF AVAILABLE MODELS 52

13 OVERALL DIMENSIONS 53

14 OUTFIT 54

15 ACCESSORIES 56
15.1 Brackets fixing 56
15.2 Muting lamp 58
15.3 Deviating mirrors 59
15.4 Columns and floor stands 61
15.5 Lens shield (PMMA) 62
15.6 Protective stands 63
15.7 Plate for protective stands 64
15.8 Test Piece 64
15.9 SG4-Dongle Ethernet adaptor 65
15.10 Safety relay 66
15.11 connection cables 67
15.12 Muting Arms 69

GLOSSARY 72

FIGURES INDEX

Fig. 1 – Resolution 4
Fig. 2 – Controlled height 5
Fig. 3 – Minimum installation distance (vertical) 6
Fig. 4 – Minimum installation distance (horizontal) 7
Fig. 5 – Incorrect device positioning 10
Fig. 6 – Correct device positioning 10
Fig. 7 11
Fig. 8 11
Fig. 9 – Minimum distance from reflecting surfaces 11
Fig. 10 12
Fig. 11 – Distance between homologous devices 12
Fig. 12 13
Fig. 13 – Interference between adjacent light curtains 14
Fig. 14 – Light curtains orientation 15
Fig. 15 – Use of deviating mirrors 15
Fig. 16 – Path of the test piece 16
Fig. 17 – Fixed brackets mounting procedure 18
Fig. 18 – Anti-vibration dampers 18
Fig. 19 – Light curtain dimensions 19
Fig. 20 – Connection to safety relay 22
Fig. 21 – Correct connection of the load 23
Fig. 22 – Incorrect connection of the load (I) 23
Fig. 23 – Incorrect connection of the load (II) 23
Fig. 24 – Incorrect connection of the load (III) 23
Fig. 25 – Behaviour of OSSDs 24
Fig. 26 – Description of the beams 25
Fig. 27 – Alignment timings 25
Fig. 28 – Restart timings (auto) 30
Fig. 29 – Restart connection (auto) 30
Fig. 30 – Restart timings (manual) 31
Fig. 31 – Restart connection (manual) 31
Fig. 32 – Test timings 32
Fig. 33 – Reset timings 33
Fig. 34 – EDM timings 34
Fig. 35 – EDM connection 34
Fig. 36 – Reduction Range 35
Fig. 37 – Examples of muting application 36
Fig. 38 – Typical Muting Application 37
Fig. 39 – T muting timings 38
Fig. 40 – T muting connection 39
Fig. 41 – L muting timings 39
Fig. 42 – L muting connection 40
Fig. 43 – Muting timeout 40
Fig. 44 – Override connection 42
Fig. 45 – Override timings (level trigger) 43
Fig. 46 – Override timings (edge trigger) 43
Fig. 47 – Override timeout timings 44

GENERAL VIEW

SG2 MUTING

LED DESCRIPTION

The microprocessor guarantees the check and the management of the beams that are sent and received through the units: the microprocessor – through some LEDs – informs the operator about the general conditions of the safety light curtain, both for settings and for diagnostics (see chapter 6 and 8).

1 GENERAL INFORMATION

1.1 GENERAL DESCRIPTION

1.1.1 General Description of the safety light curtains

The safety light curtains of the SG2 series are optoelectronic multibeam devices that are used to protect working areas that, in presence of machines, robots, and automatic systems in general, can become dangerous for operators that can get in touch, even accidentally, with moving parts.
The light curtains of the SG2 series are Type 2 intrinsic safety systems used as accident-prevention protection devices and are manufactured in accordance with the international Standards in force for safety, in particular:

EN 61496-1/AC: 2010 Safety of machinery: electrosensitive protective equipment.
Part 1: General prescriptions and tests.

IEC 61496-2: 2006 Safety of machinery: electrosensitive protective equipment - Particular requirements for equipment using active optoelectronic protective devices.

EN ISO 13849-1: 2008 (Cat.4, PL e) Safety of machinery. Safety-related parts of control systems.
Part 1: General principles for design

EN 61508-1: 1998 (SIL 3) Functional safety of electrical/electronic/programmable electronic safety-related systems.
Part 1: General requirements

EN 61508-2: 2000 (SIL 3) Functional safety of electrical/electronic/programmable electronic safety-related systems.
Part 2: Requirements for electrical/electronic/programmable electronic safety-related systems

EN 61508-3: 1998 (SIL 3) Functional safety of electrical/electronic/programmable electronic safety-related systems.
Part 3: Software requirements

EN 61508-4: 1998 (SIL 3) Functional safety of electrical/electronic/programmable electronic safety-related systems.
Part 4: Definitions and abbreviations

EN 62061: 2005 (SIL CL3) Safety of machinery. Functional safety of electrical/ electronic/programmable electronic safety-related control systems.

The device, consisting of one emitter and one receiver housed inside strong aluminium profiles, generates infrared beams that detect any opaque object positioned within the light curtain detection field. The emitter and the receiver are equipped with the command and control functions. The connections are made through a M12 connector located in the lower side of the profile. The synchronisation between the emitter and the receiver takes place optically, *i.e.* no electrical connection between the two units is required. The microprocessor guarantees the check and the management of the beams that are sent and received through the units: the microprocessor – through some LEDs – informs the operator about the general conditions of the safety light curtain (see chapter 8 "*Diagnostic*").
The device consists in 2 units that, according to the model, are composed by one or several emitting and receiving modules. The receiver is the main controller for all functions. It monitors all safety actions in case of failure and performs general functions as well.

During installation, an user interface facilitates the alignment of both units (see chapter 5 "*Alignment procedure*").
As soon as an object, a limb or the operator's body accidentally interrupts one or some of the infrared beams sent by the emitter, the receiver immediately opens the OSSD outputs and blocks the MPCE machine (if correctly connected to the OSSD).

Some parts or sections of this manual containing important information for the user or installing operator are preceded by a note:

⚠	**The information provided in the paragraphs following this symbol is very important for safety and may prevent accidents.** **Always read this information accurately and carefully follow the advice to the letter.**

This manual contains all the information necessary for the selection and operation of the safety devices.
However, specialised knowledge not included in this technical description is required for the planning and implementation of a safety light curtain on a power-driven machine.
As the required knowledge may not be completely included in this manual, we suggest the customer to contact Datalogic Technical Service for any necessary information relative to the functioning of the SG light curtains and the safety rules that regulate the correct installation (see chapter 9).

1.1.2 Package Contents

Package contains the following objects:

- Receiver (RX)
- Emitter (TX)
- Installation Quick Guide of SG2 MUTING curtain
- Biannual checklist and periodical maintenance schedule
- CD with instruction manual and other documents
- 4 angled fixing brackets and specific fasteners
- 2 angled fixing brackets for models with heights included between 1200 and 1800 mm

1.2 NEW FEATURES COMPARED TO SG2 BASE/EXTENDED

With respect to SG2 BASE/EXTENDED series, safety light curtains of SG2 MUTING series have some new important features:

- Higher operating distance
- New profile compatible with SE accessories
- New fastening system with rotating brackets
- Advanced alignment function for receiver and transmitter units
- Muting function
- Partial muting
- Override
- Override status
- Reduction Range
- Null dead zone (the controlled height of the light curtain is equivalent to the light curtain's height)
- Basic configuration with push-buttons (BCM)

1.3 HOW TO CHOOSE THE DEVICE

There are at least three different main characteristics that should be considered when choosing a safety light curtain, after having evaluated the risk assessment.

1.3.1 Resolution

The resolution of the device is the minimum dimension that an opaque object must have in order to obscure at least one of the beams that constitute the sensitive area.
The resolution strictly depends on the part of the body to be protected.

R = 30 mm hand protection

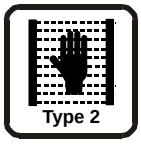

As shown in Fig. 1, the resolution only depends on the geometrical characteristics of the lenses, diameter and distance between centres, and is independent of any environmental and operating conditions of the safety light curtain.

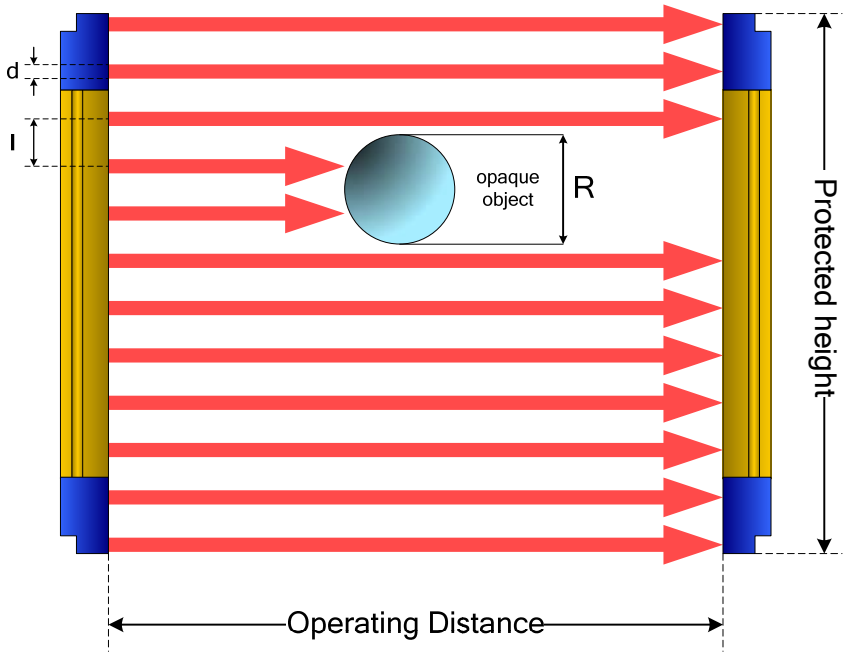

Fig. 1 – Resolution

The resolution value is obtained applying the following formula:

$$R = l + d$$

where:

l = Distance between two adjacent optics
d = Lens diameter

1.3.2 Controlled height

The controlled height is the height protected by the safety light curtain

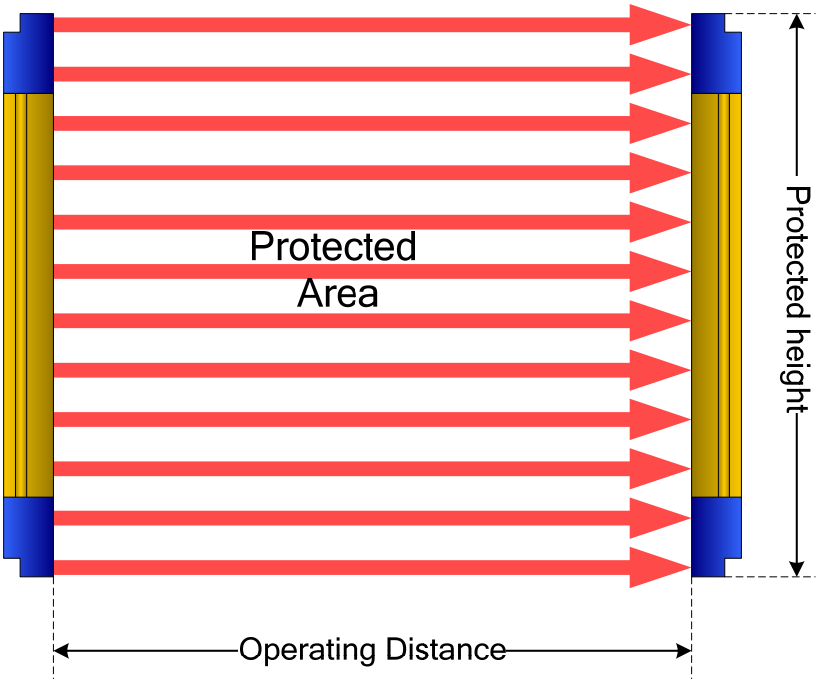

Fig. 2 – Controlled height

The height controlled by the SG2 MUTING is the whole height of the light curtain. Referring to the figure above the protected height is reported in the table here below.

Model	Protected height (mm)
SG2-30-030-OO-W	300
SG2-30-045-OO-W	450
SG2-30-060-OO-W	600
SG2-30-075-OO-W	750
SG2-30-090-OO-W	900
SG2-30-105-OO-W	1050
SG2-30-120-OO-W	1200
SG2-30-135-OO-W	1350
SG2-30-150-OO-W	1500
SG2-30-165-OO-W	1650
SG2-30-180-OO-W	1800

1.3.3 Minimum installation distance

The safety device must be positioned at a specific safety distance (Fig. 3).
This distance must ensure that the dangerous area cannot be reached before the dangerous motion of the machine has been stopped by the ESPE.
The safety distance depends on 4 factors, according to the ISO 13855/EN 999 Standard:
Response time of the ESPE (the time between the effective beam interruption and the opening of the OSSD contacts)
Machine stopping time (the time between the effective opening of the contacts of the ESPE and the real stop of the dangerous motion of the machine)
ESPE resolution
Approaching speed of the object to be detected

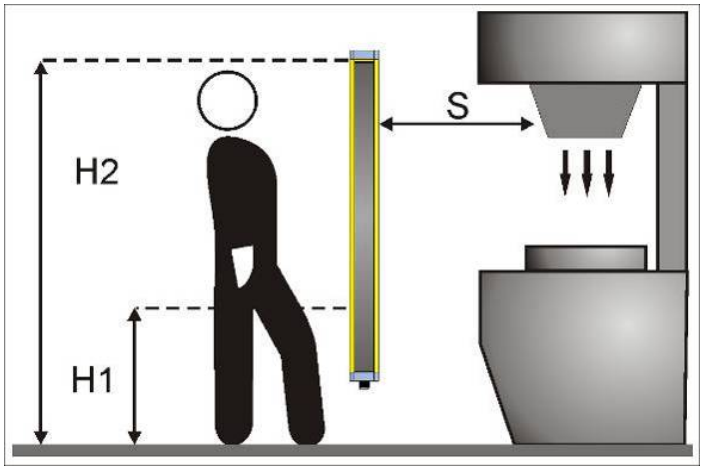

Fig. 3 – Minimum installation distance (vertical)

The following formula is used for the calculation of the safety distance:

$$S = K (t1 + t2) + C$$

where:

S = Minimum safety distance in mm
K = Speed of the object, limb or body approaching the dangerous area in mm/sec
t1 = Response time of the ESPE in seconds (see chapter 11)
t2 = Machine stopping time in seconds
d = Resolution of the system
C = Additional distance based on the possibility to insert the body or one of body parts inside the dangerous area before the protective device trips.
C = 8 (d -14) for devices with resolution ≤ 40 mm
C = 850 mm for devices with resolution > 40 mm

NOTE: K value is:
2000 mm/s if the calculated value of S is ≤ 500 mm
1600 mm/s if the calculated value of S is > 500 mm

When devices with > 40 mm resolution are used, the height of the top beam has to be ≥ 900 mm (H2) from machine supporting base while the height of the bottom beam has to be ≤ 300 mm (H1).
If the safety light curtain must be mounted in a horizontal position (Fig. 4), the distance between the dangerous area and the most distant optical beam must be equal to the value calculated using the following formula:

$$S = 1600 \text{ mm/s } (t1 + t2) + 1200 - 0.4 H$$

where:
S = Minimum safety distance in mm.
t1 = Response time of the ESPE in seconds (see chapter 11)
t2 = Machine stopping time in seconds.
H = Beam height from ground; this height must always be less than 1,000 mm.

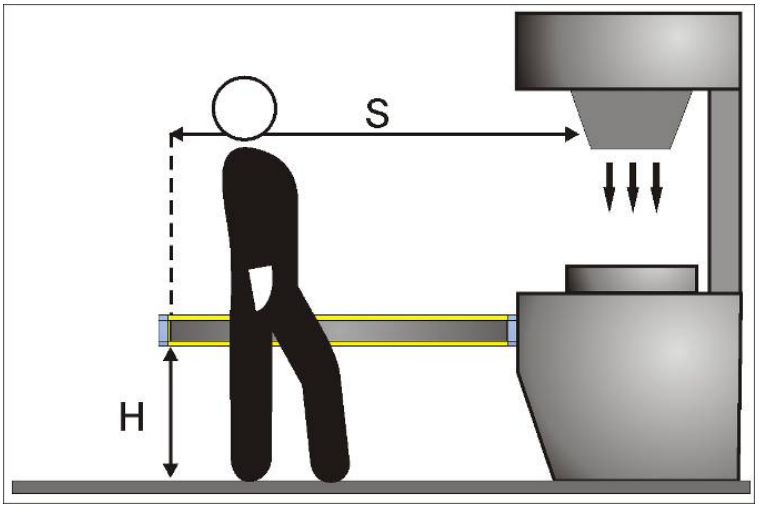

Fig. 4 – Minimum installation distance (horizontal)

Practical examples:

Let's suppose to have a light curtain with height = 600 mm
To calculate the distance of the device from the ESPE, in a vertical position, the following formula is used:

$$S = K*T + C$$

where:
T = $t_1 + t_2$
t_1 = ESPE response time + SE-SR2 relay release time (max 80 ms)
t_2 = Machine total stopping time.
C = 8 * (d – 14) for devices with resolution <= 40 mm
D = resolution

In all cases, if K = 2000mm/sec then S > 500 mm. Distance will have then to be recalculated using K = 1600 mm/sec.

⚠	**WARNING: The reference standard is ISO 13855/EN 999 "Machine safety - the positioning of the protective device based on the approaching speed of the human body".** **The following information is to be considered as indicative and concise. For correct safety distance please refer to complete standard ISO 13855/EN 999.**

The following information is to be considered as indicative and concise.
For correct safety distance please refer to complete standard ISO 13855/EN 999.

1.4 TYPICAL APPLICATIONS

The SG2 MUTING safety light curtains are used in all automation fields where the control and protection of access to dangerous zones is necessary.
In particular they are used to stop the moving mechanical parts of:

- Automatic machines
- Packaging machines, handling machines, storing machines
- Wood working machines, glass working machines, ceramics working machines, etc.
- Automatic and semi–automatic assembly lines
- Automatic warehouses
- Presses, punching machines, benders and cutters

In food industry applications, DATALOGIC AUTOMATION Technical Service has to verify the compatibility of the material of the safety light curtain housing with any chemical agents used in the production process.
The following pictures show some main applications.

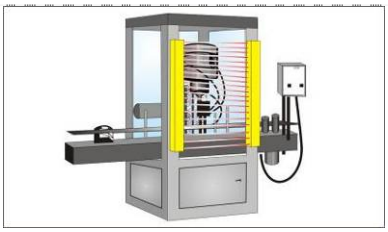

Automatic packaging machines

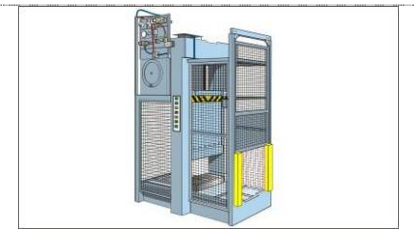

Presses and punching machines

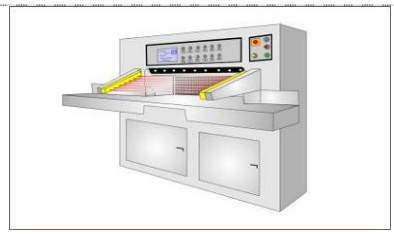

Benders and cutters

1.5 SAFETY INFORMATIONS

⚠	**For a correct and safe use of the safety light curtains of the SG2 series, the following points must be observed:**

- The stopping system of the machine must be electrically controlled
- This control system must be able to stop the dangerous movement of the machine within the total machine stopping time T as reported in par. 1.3.3 and during all working cycle phases
- Mounting and connection of the safety light curtain must be carried out by qualified personnel only, according to the indications included in the special sections (see chapters 2, 3, 4, 5) and in the applicable standards
- The safety light curtain must be securely placed in a particular position so that access to the dangerous zone is not possible without the interruption of the beams (see chapters 2, 3)
- The personnel operating in the dangerous area must be well trained and must have adequate knowledge of all the operating procedures of the safety light curtain
- The TEST button must be located outside the protected area because the operator must check the protected area during all Test and Reset operations

Please carefully read the instructions for the correct functioning before powering the light curtain.

2 INSTALLATION

2.1 PRECAUTIONS TO BE OBSERVED FOR THE CHOICE AND INSTALLATION

⚠	**Make sure that the protection level assured by the SG2 device (Type 2) is compatible with the real danger level of the machine to be controlled, according to EN 954-1 and EN 13849.**

- Use only matched pair with same serial no.
- The outputs (OSSD) of the ESPE must be used as machine stopping devices and not as command devices. The machine must have its own START command
- The dimension of the smallest object to be detected must be larger than the resolution level of the device
- The ESPE must be installed in a room complying with the technical characteristics indicated in chapter 11.
- Do not install anything close to strong and/or flashing light sources or close to similar devices
- The presence of intense electromagnetic disturbances could affect device's correct operation. This condition shall be carefully assessed by seeking the advice of Datalogic Technical Service
- The operating distance of the device can be reduced in presence of smog, fog or airborne dust
- A sudden change in environment temperature, with very low minimum peaks, can generate a small condensation layer on the lenses and so jeopardise functioning

2.2 GENERAL INFORMATION ON DEVICE POSITIONING

The safety light curtain should be carefully positioned, in order to reach a very high protection standard; access to the dangerous area must only be possible by passing through the protecting safety light beams.

⚠	**Fig. 5 shows some examples of possible access to the machine from the top and the bottom sides. These situations may be very dangerous and so the installation of the safety light curtain at a sufficient height in order to completely cover the access to the dangerous area (Fig. 6) becomes necessary.**

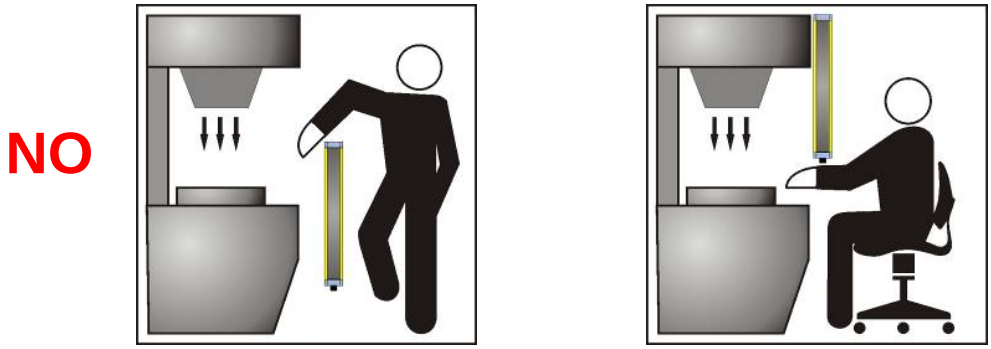

Fig. 5 – Incorrect device positioning

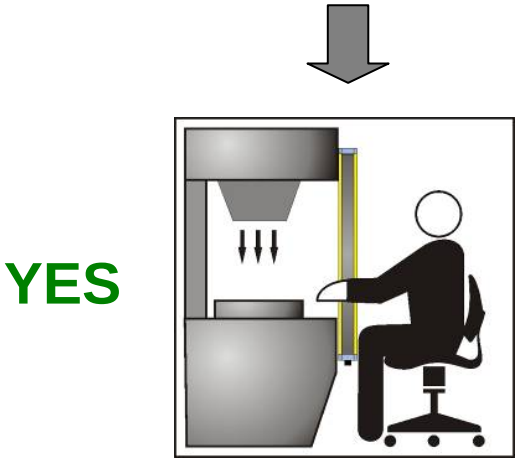

Fig. 6 – Correct device positioning

Under standard operating conditions, machine starting must not be possible while operators are inside the dangerous area.
When the installation of the safety light curtain very near to the dangerous area is not possible, a second light curtain must be mounted in a horizontal position in order to prevent any lateral access, as shown in Fig. 8.

⚠	**If the operator is able to enter in the dangerous area, an additional mechanical protection must be mounted to prevent the access.**

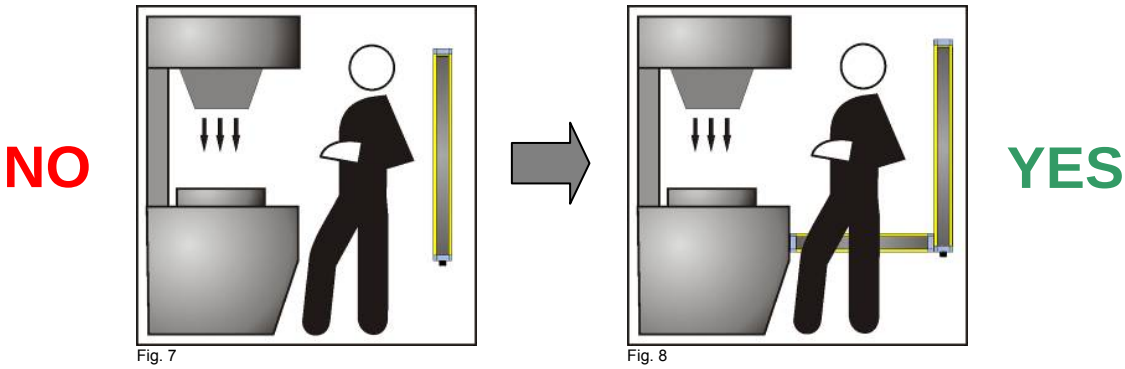

Fig. 7 Fig. 8

2.2.1 Minimum distance from reflecting surfaces

Reflecting surfaces placed near the light beams of the safety device (over, under or laterally) can cause passive reflections. These reflections can affect the recognition of an object inside the controlled area. Moreover, if the RX receiver detects a secondary beam (reflected by the side-reflecting surface) the object might not be detected, even if the object interrupts the main beam.

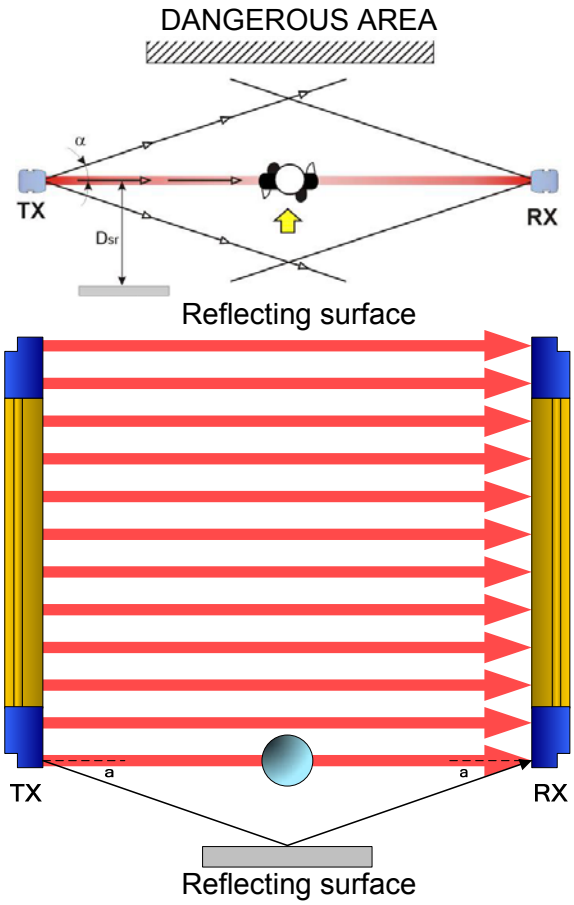

Fig. 9 – Minimum distance from reflecting surfaces

It is important to position the safety light curtain according to the minimum distance from reflecting surfaces.

The minimum distance depends on:

- operating distance between emitter (TX) and receiver (RX);
- real aperture angle of ESPE (EAA); especially:

for ESPE type 2 EAA = 10° ($\alpha = \pm 5°$)

Diagram of Fig. 10 shows the minimum distance from the reflecting surface (Dsr), based on the operating distance:

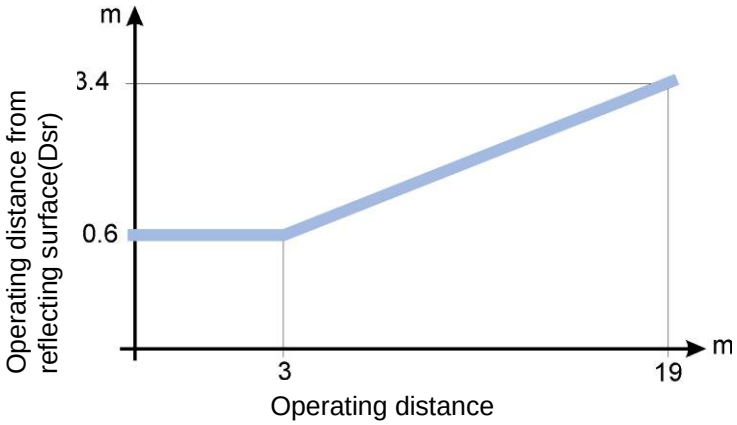

Fig. 10

The formula to get Dsr is the following:

Dsr (m) = 0.6 for operative distances < 3 m

Dsr (m) = operating distance (m) x tg 2α for operative distances $\geq$ 3 m

2.2.2 Distance between homologous devices

If different safety devices have to be installed in adjacent areas, the emitter of one device must not interfere dangerously with the receiver of the other device.

The TXB interfering device must be positioned outside a minimum Ddo distance from the TXA – RXA emitter-receiver couple axis.

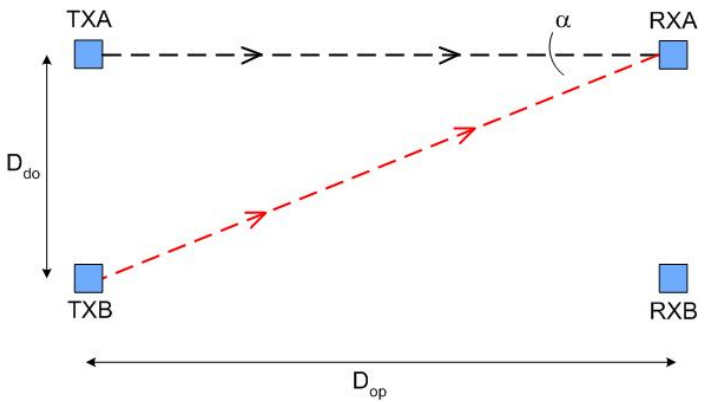

Fig. 11 – Distance between homologous devices

This minimum Ddo distance depends on:

- the operating distance between emitter (TXA) and receiver (RXA)
- the effective aperture angle of the ESPE (EAA)

The following graphic shows the distance from the interfering devices (D_{do}) according to the operating distance (D_{op}) of the couple (TXA – RXA).

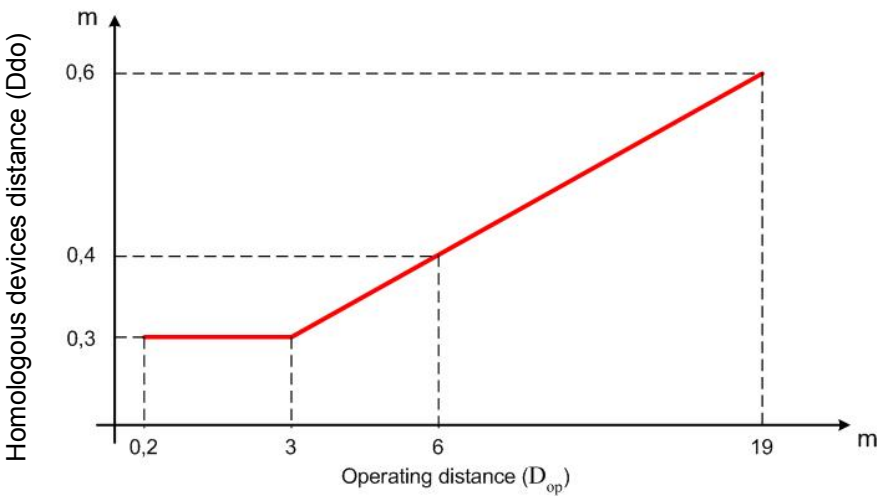

Fig. 12

The following table shows, for convenience, the values of the minimum installation distances relative to some operating distances:

Operating distance (m)	Minimum installation distance (m)
3	0,3
6	0,4
10	0,5
19	0,6

⚠	**WARNING: the interfering device (TXB) must be positioned at the same Ddo distance, calculated as shown above, even if closer to TXA respect to RXA.**

When several safety devices have to be installed in adjacent areas, the interference between the emitter of one device and the receiver of the other must be avoided.

Fig. 13 provides an example of possible interference between different devices and two possible solutions.

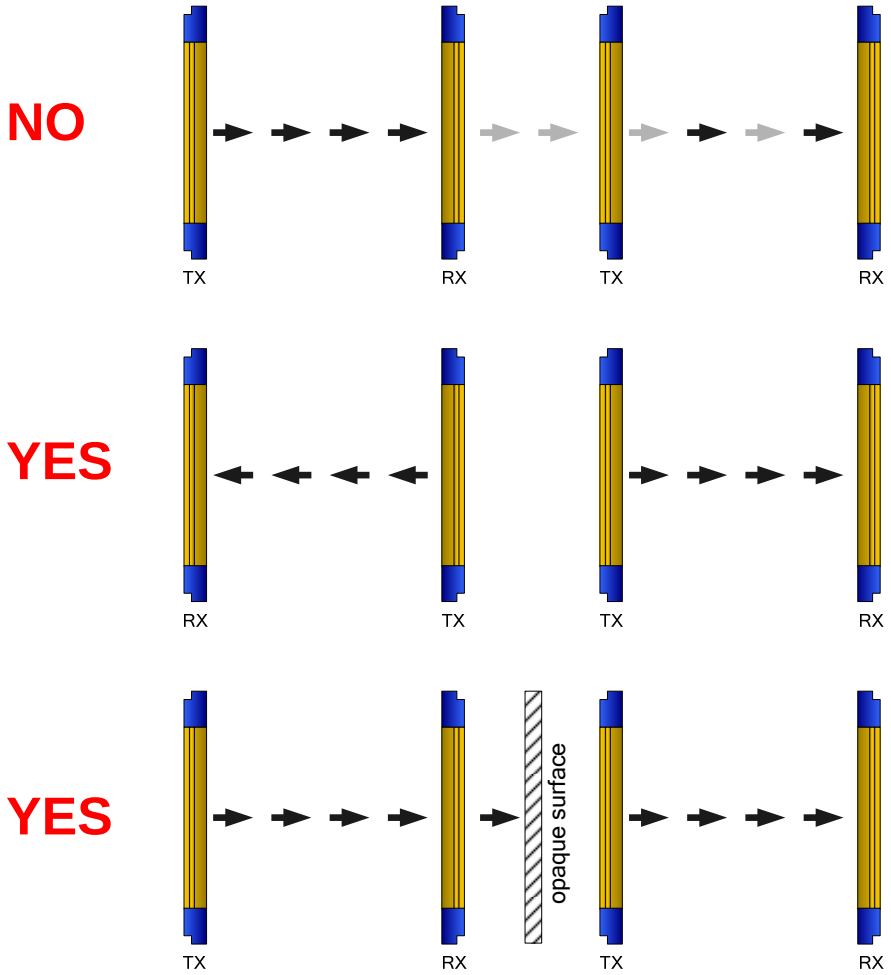

Fig. 13 – Interference between adjacent light curtains

2.2.3 Emitter and Receiver Orientation

The two units shall be assembled parallel each other, with the beams arranged at right angles with the emission and receiving surface, and with the connectors pointing to the same direction.

The configurations shown in Fig. 14 must be avoided:

Fig. 14 – Light curtains orientation

2.2.4 Use of deviating mirrors

The control of any dangerous area, with several but adjacent access sides, is possible using only one safety device and well-positioned deviating mirrors.
Fig. 15 shows a possible solution to control three different access sides, using two mirrors placed at 45° with respect to the beams.

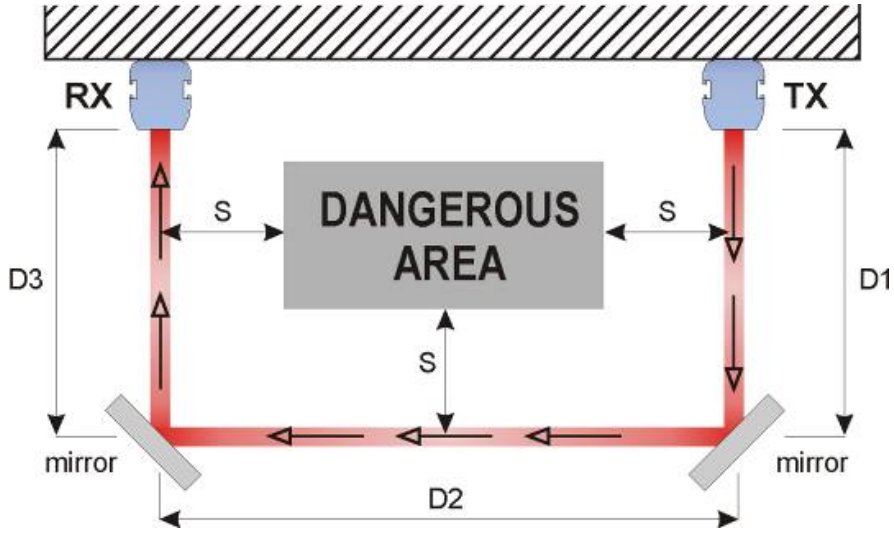

Fig. 15 – Use of deviating mirrors

The operator must respect the following precautions when using the deviating mirrors:

- The alignment of the emitter and the receiver can be a very critical operation when deviating mirrors are used. Even very small displacements of the mirror is enough to lose alignment. The use of Datalogic laser pointer accessory is recommended under these conditions
- The minimum safety distance (S) must be respected for each single section of the beams.
- The effective operating range decreases by about 15% by using only one deviating mirror, the percentage further decreases by using 2 or more mirrors (for more details refer to the technical specifications of the mirrors used).

The following table shows the operating distances relating to the number of mirrors used.

number of mirrors	operating distance
1	16.5 m
2	13.7 m
3	11.6 m

- Do not use more than three mirrors for each device.
- The presence of dust or dirt on the reflecting surface of the mirror causes a drastic reduction in the range.

2.2.5 Checks after first installation

The control operations to carry-out after the first installation and before machine start-up are listed hereinafter. The controls must be carried-out by qualified personnel, either directly or under the strict supervision of the person in charge of machinery Safety.

Check that:

- ESPE remains in SAFE state intercepting the beams along the protected area using the specific test piece (TP-30), following the Fig. 16 scheme.

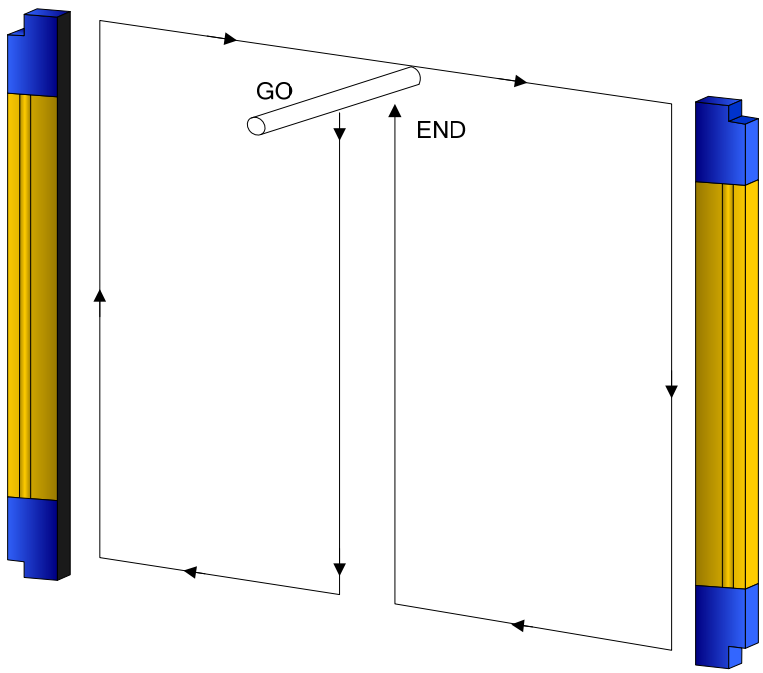

Fig. 16 – Path of the test piece

- ESPE has to be correctly aligned, press slightly on the product side in both directions the red LED must not turn on

- The activation of the TEST function (on TX side) causes the opening of the OSSD outputs (red LED, OSSD on RX side, ON and controlled machine stop)

- The response time at machine STOP, including the ESPE and machine response times, must be included in the limits defined in the calculation of the safety distance (refer to chapter 2)

- The safety distance between the dangerous parts and ESPE must comply with the requirements indicated in chapter 2

- A person must not access or remain between ESPE and the dangerous parts of the machine

- Access to the dangerous areas of the machine must not be possible from any unprotected area

- ESPE must not be disturbed by external light sources, ensuring that it remains in NORMAL OPERATION condition for at least 10-15 minutes and, placing the specific test piece in the protected area, in the SAFE state for the same period

- Verify the correspondence of all the accessory functions, activating them in the different operating conditions

3 MECHANICAL MOUNTING

The emitting (TX) and receiving (RX) units must be installed with the relevant sensitive surfaces facing each other. The connectors must be positioned on the same side and the distance must be included within the operating range of the model used (see chapter 11).

The two units must be positioned the most aligned and parallel possible.
The next step is the fine alignment, as shown in chapter 5.

Outfit angled fixing brackets kit, for units mounting, must be used as described below (Fig. 17).

Adjustable supports for adjusting unit inclinations around the axes are available on request (see chapter 15).

To mount the angled fixing brackets kit, place the threaded pins metallic insert into the dedicated side seat of the terminator cap side light curtain closing cap; slide the insert towards the metallic drawn profile groove. Fix the bracket against the profile by tightening the M5 hexagonal nuts. It's possible to slide the bracket group along their dedicated rail and fix it once again just working on the above mentioned nuts.

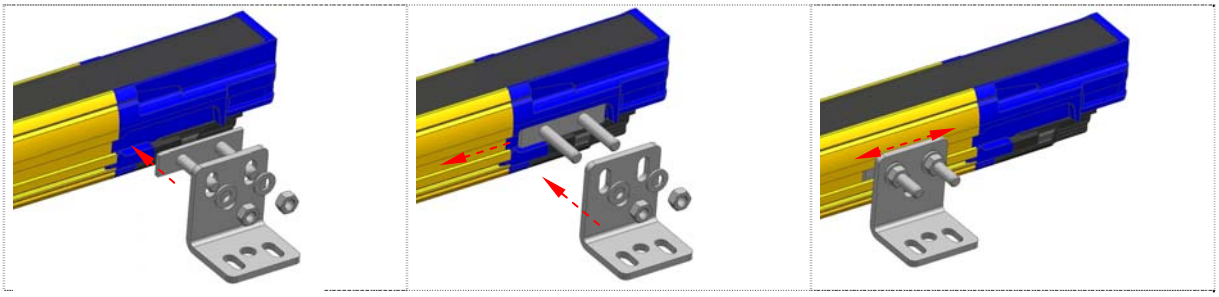

Fig. 17 – Fixed brackets mounting procedure

In case of applications with particularly strong vibrations, vibration dampers, together with mounting brackets, are recommended to reduce the impact of the vibrations.

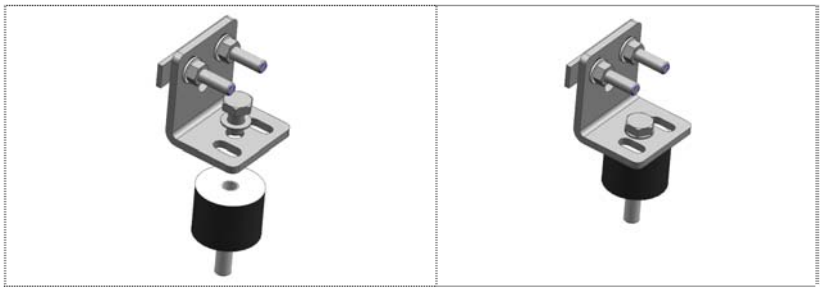

Fig. 18 – Anti-vibration dampers

The recommended mounting positions according to the light curtain length are shown in Fig. 19 and in the following table.

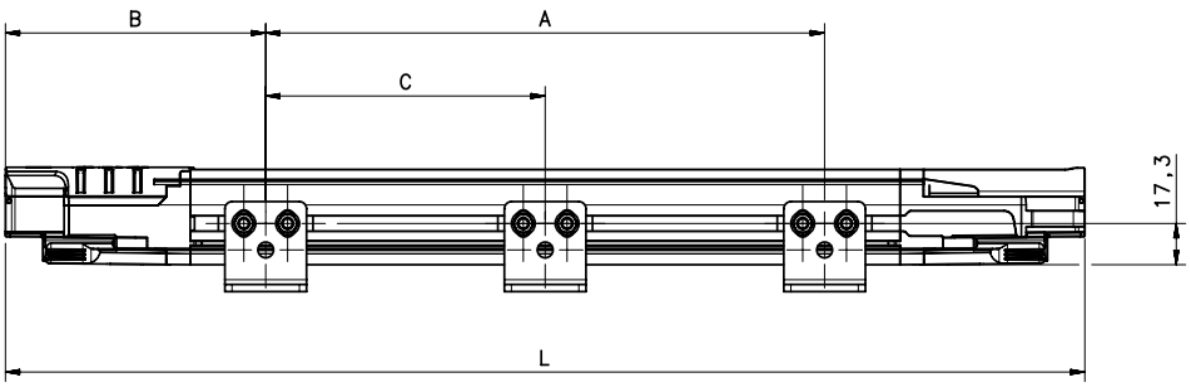

Fig. 19 – Light curtain dimensions

MODELS	L (mm)	A (mm)	B (mm)	C (mm)
SG2-30-030-OO-W	306.3	86.3	110	-
SG2-30-045-OO-W	456.3	236.3	110	-
SG2-30-060-OO-W	606.2	306.2	150	-
SG2-30-075-OO-W	756.2	406.2	175	-
SG2-30-090-OO-W	906.1	506.1	200	-
SG2-30-105-OO-W	1056.1	606.1	225	-
SG2-30-120-OO-W	1206	966	150	453
SG2-30-135-OO-W	1356	1066	175	503
SG2-30-150-OO-W	1505.9	1166	200	553
SG2-30-165-OO-W	1655.9	1266	225	603
SG2-30-180-OO-W	1805.8	1366	250	652.9

4 ELECTRICAL CONNECTIONS

All electrical connections to the emitting and receiving units are made through some particular cables; these cables are composed of a rectangular 18 pin connector on light curtain side and M12 male connector(s) on the other side, depending on the kind of light curtain used.
The receiving unit has one M12 12-poles connector and one M12 5-poles connector.
The emitting unit has one M12 5-poles.
The cables have to be connected on the bottom side of the light curtains (leds and push button side) by removing the white cap that is present.

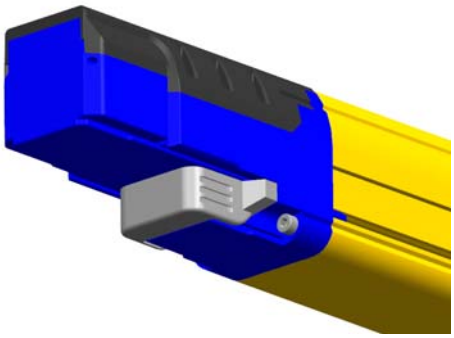

Take care that the terminator cap (CVL-5196, see chapter 14) is connected on the top side of the light curtains. If this connection misses, the units go in critical Communication failure.

PIG-TAIL CABLE MUTING CONFIGURATION FOR RECEIVER (CS-R1-75-B-002)	
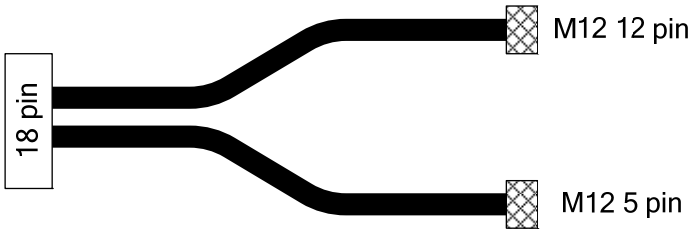	**M12 12 pin:** 1. 24V (brown) 2. 0V (blue) 3. RESET/RESTART/ALIGN (white) 4. OVERRIDE1 (green) 5. OSSD2 (pink) 6. EDM (yellow) 7. MUTING DISABLE (black) 8. OSSD1 (grey) 9. OVERRIDE2 (red) 10. MUTING LAMP (violet) 11. OVERRIDE STATUS (grey-pink) 12. EARTH (red-blue) **M12 5 pin:** 1. 24V (brown) 2. MUTING2 (white) 3. 0V (blue) 4. MUTING1 (black) 5. N.C. (grey)

PIG-TAIL CABLE FOR EMITTER (CS-G1-50-B-002)	
	M12 5 pin: 1. 24V (brown) 2. TEST (white) 3. 0V (blue) 4. EARTH (black) 5. REDUCTION RANGE (grey)

M12 Connectors pinout	
12 pin	5 pin
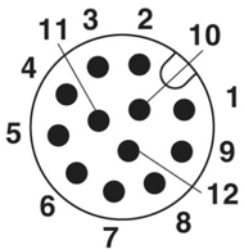	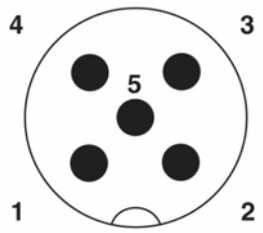

MUTING CONFIGURATION		
LINE	**LAYOUT CONNECTION**	**BEHAVIOUR**
RESET	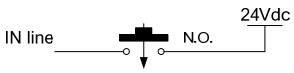	active on high level in failure lockout
RESTART	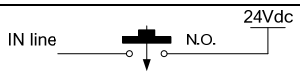	active on high level at runtime
ALIGNMENT	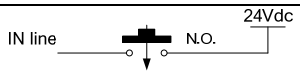	active on high level at startup
OVERRIDE 1	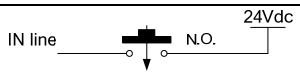	active on high level at runtime
OVERRIDE 2	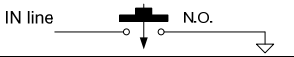	active on low level at runtime
EDM	SEE PAR. 7.4 FOR CONNECTIONS	must be ossds antivalent at runtime with edm enabled
MUTING DISABLE	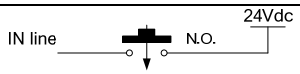	muting disabled on high level at runtime

MUTING CONFIGURATION RECEIVER		
LINE	**LAYOUT CONNECTION**	**BEHAVIOUR**
OSSD1 / OSSD 2	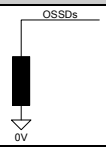	high level = free path low level = object detection
OVERRIDE STATUS	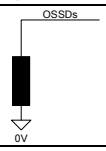	high level = override function active low level = override function not active **NB: at startup there are fluctuations on this line not concerning the override activation**
MUTING LAMP	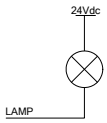	open collector sinks on muting activation.
MUTING1/MUTING2	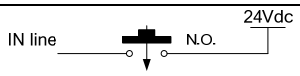	active on high level at runtime
EARTH		connect directly to earth

EMITTER		
LINE	**LAYOUT CONNECTION**	**BEHAVIOUR**
TEST	IN line N.O. 24Vdc	active on high level at runtime
REDUCTION RANGE	IN line N.O. 24Vdc	active on high level at startup
EARTH		connect directly to earth

4.1 NOTES ON CONNECTIONS

For the correct functioning of the SG2 safety light curtains, the following precautions regarding the electrical connections have to be respected:

- Do not place connection cables in contact with or near high-voltage cables and/or cable undergoing high current variations (e.g. motor power supplies, inverters, etc.);
- Do not connect in the same multi-pole cable the OSSD wires of different light curtains;
- The TEST wire must be connected through a N.O. button to the supply voltage of the ESPE.

⚠	**The TEST button must be located in such a way that the operator can check the protected area during any test.**

⚠	**The RESET/RESTART/ALIGN button must be located in such a way that the operator can check the protected area during any reset operation.**

- The device is already equipped with internal overvoltage and overcurrent suppression devices. The use of other external components is not recommended.

Example: connection to the safety relay.

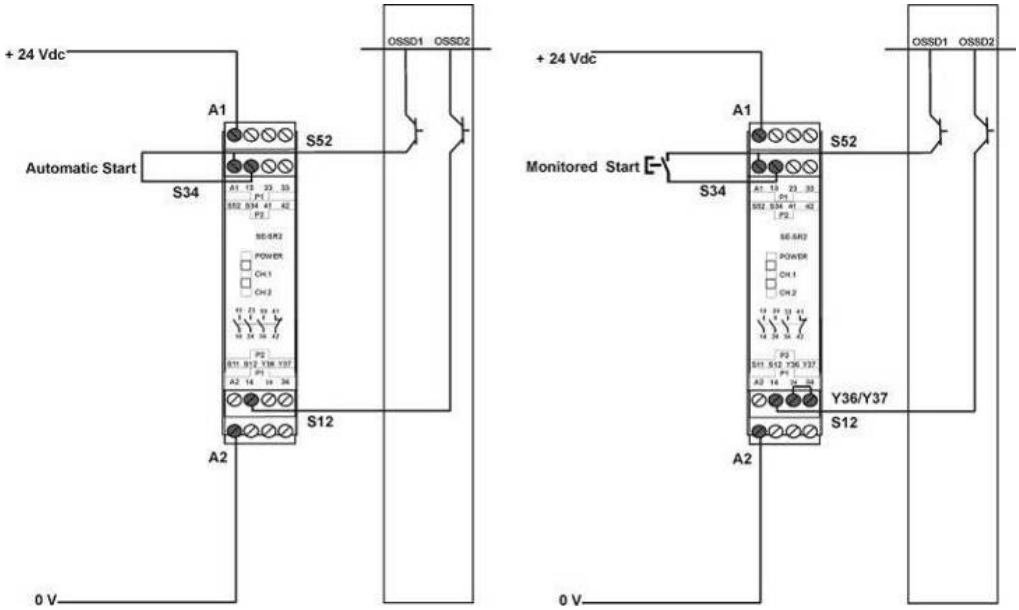

Fig. 20 – Connection to safety relay

- Do not use varistors, RC circuits or LEDs in parallel at relay inputs or in series at OSSD outputs.
- The OSSD1 and OSSD2 safety contacts cannot be connected in series or in parallel, but they have to be used separately (Fig. 21).
- If one of these configurations is erroneously used, the device enters into the output failure condition (see chapter 8).
- Connect both OSSDs to the device to control. Failure to connect an OSSD to the activating device jeopardises the system safety degree that the light curtain has to control.

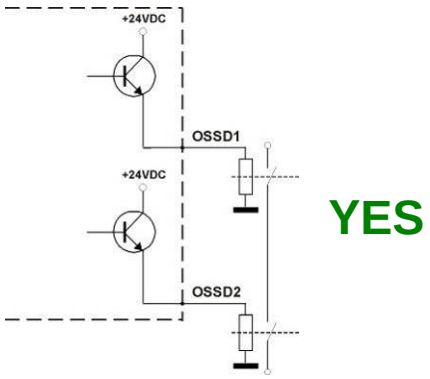

Fig. 21 – Correct connection of the load

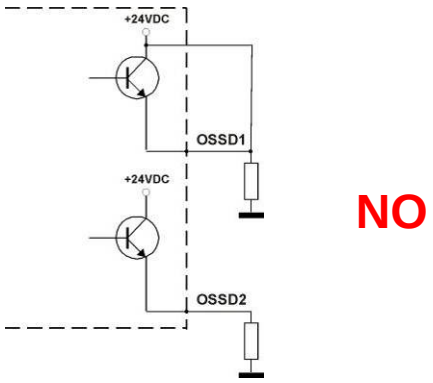

Fig. 22 – Incorrect connection of the load (I)

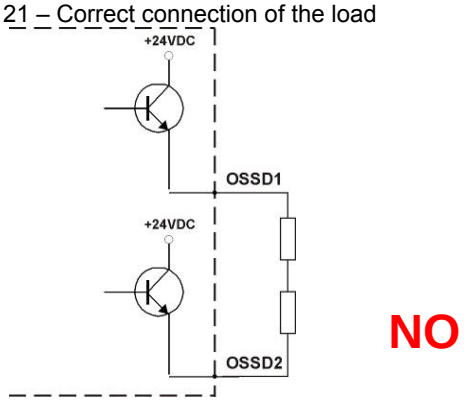

Fig. 23 – Incorrect connection of the load (II)

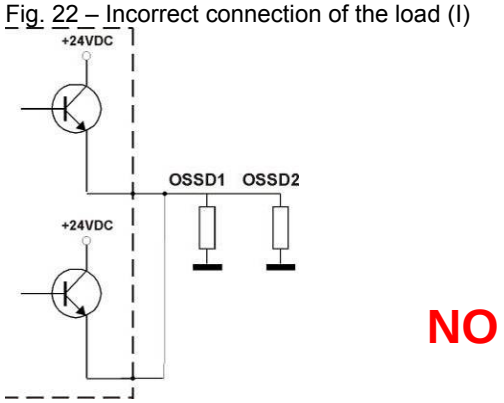

Fig. 24 – Incorrect connection of the load (III)

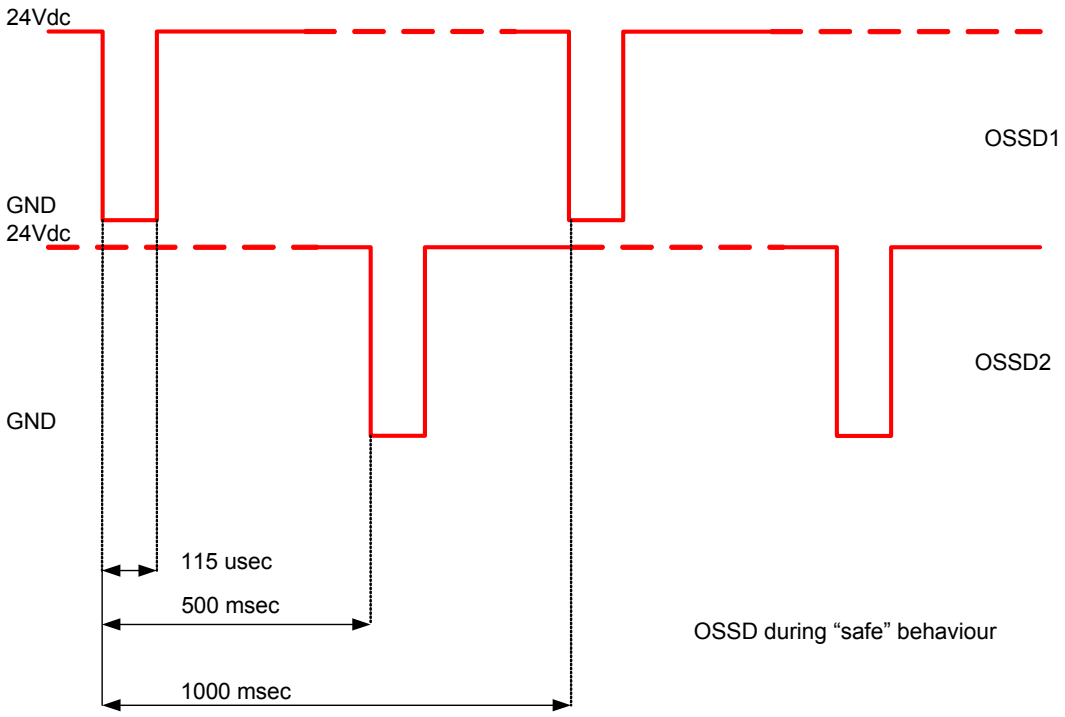

Fig. 25 – Behaviour of OSSDs

5 ALIGNMENT PROCEDURE

The alignment between the emitting and the receiving units is necessary to obtain the correct functioning of the light curtain.
A good alignment prevents output's instability caused by dust or vibrations.
The alignment is perfect if the optical axes of the first and the last emitting unit's beams coincide with the optical axes of the corresponding elements of the receiving unit.
Since the light curtain has two beams for the synchronization, let's call SYNC1 the sync beam at the bottom, the first beam of the array, and SYNC2 the sync beam on the opposite part of the light curtain, the last beam of the array.
The figure shows that the first beam is located at the bottom edge of the light curtain, near to led display. The last beam is at the opposite near the terminator cap. These two beams are the synchronization beams too.

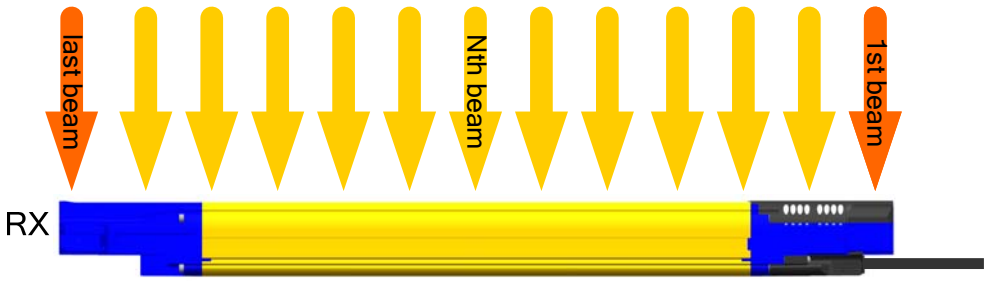

Fig. 26 – Description of the beams

The Alignment function can be activated by simply keeping pressed the external normally open push-button linked to RESET/RESTART/ALIGN input (pin 3 of M12-12 poles – RX side) at start-up until the second led (red) begins to blink indicating the activation of the Alignment function, as shown in the following timing diagram. When a good state of alignment is reached a power OFF and a power ON operation carry back the ESPE in normal operation.

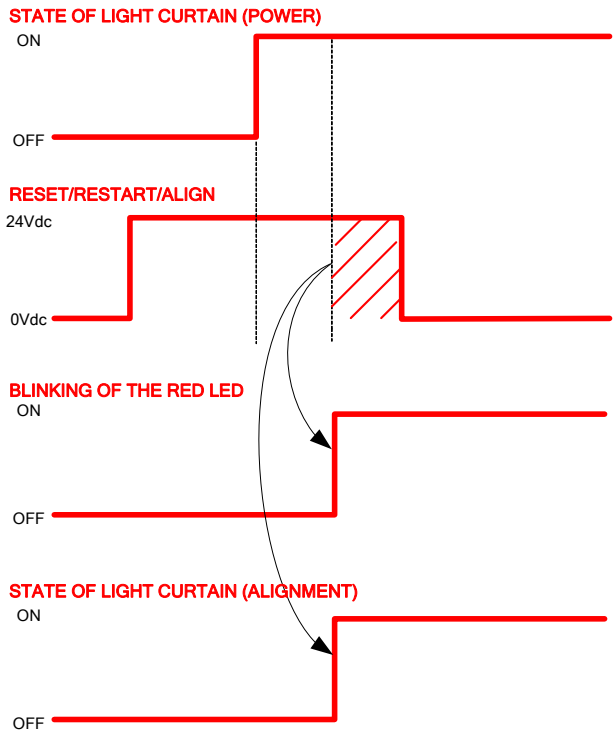

Fig. 27 – Alignment timings

In Alignment Mode ESPE is always in Safe State and the OSSDs are kept OFF.
The state of alignment is estimated from RX unit by reading the received signal level of each beam compared on 4 factory established thresholds. First and last beams received level get some more weight.
In alignment mode user interface informs the user about quality and level of alignment:

A. Keep the receiver in a steady position and set the emitter until the yellow SYNC1 LED is OFF. This condition shows the effective alignment of the first synchronisation beam
B. Rotate the emitter, pivoting on the lower optics axis, until the yellow SYNC2 LED is OFF
C. Delimit the area in which alignment is good and steady through some micro adjustments - for the first and then for the second unit – in order to have the maximum alignment LEVEL (●●●●) and then place both units in the centre of this area
D. Fix the two units firmly using brackets. Verify that the LEVEL on the RX unit is as high as possible and beams are not interrupted, then verify that all LEVEL Led turn OFF if even one single beam is interrupted. This verification shall be made with the special cylindrical “Test Piece” having a size suitable to the resolution of the device used (see par 2.2.5)
E. Switch-off and on the device in standard operating mode. The alignment level is monitored also during the device normal operation with the same display (see par 8.1). Once the light curtain has been aligned and correctly fastened, the signal display is useful both to check the alignment and show a change in the environmental conditions (occurrence of dust, light disturbance and so on) via signal level monitoring

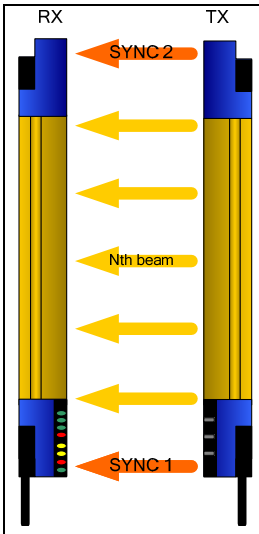

Indication	RX Led configuration	Alignment Status	OSSD Status in Normal Operation
No Sync, check SYNC1	● ☀ ● ● ● ● ● ●	NONE	OFF
SYNC1 aligned	● ☀ ● ● ● ● ● ●	NONE	OFF
SYNC2 aligned	● ☀ ● ● ● ● ● ●	NONE	OFF
One or more intermediate beams not aligned	● ☀ ● ● ● ● ● ●	NONE	OFF
All beams aligned	● ☀ ● ● ● ● ● ●	BAD	ON
All beams aligned	● ☀ ● ● ● ● ● ●		ON
All beams aligned	● ☀ ● ● ● ● ● ●		ON
All beams aligned	● ☀ ● ● ● ● ● ●	EXCELLENT	ON

6 FUNCTION SETTING

ESPE operation functions and parameters configuration can be performed by means of push-buttons; this setting lets the user select among basic functions / basic parameters with the help of push buttons and led user interface (available on both RX and TX unit)

BASIC CONFIGURATION MODE

A user interface of 8 leds and 3 protected push buttons lets the user operate basic configuration. Leds are the same used for user interface in normal operation.
The user must use the provided special tool (see chapter 14) to activate push buttons thus accidental access to safety configuration is avoided.

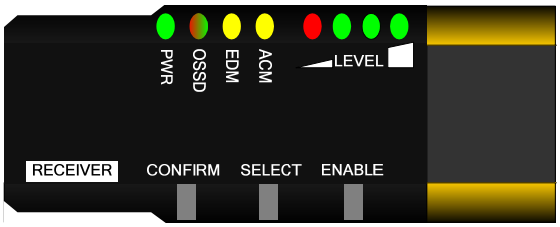

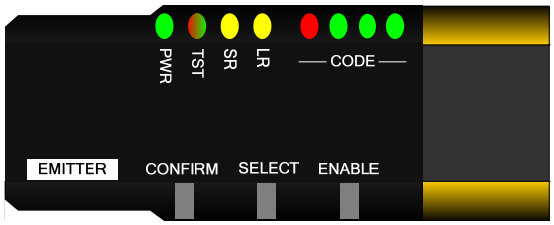

Basic configuration steps:

In the right side of user control panel (on both units of the light curtain) a setting interface composed by 3 push buttons is present; the purpose of the interface is to let the user set light curtain locally.

Setting interface is composed by a CONFIRM push button used to enter in BCM and to confirm the selected configuration, a SELECT push button used to roll by different functions and an ENABLE push button to activate/deactivate the current function.

Here below the necessary steps for BCM configuration:

1. Keep **CONFIRM** button pressed to enter Basic Configuration Mode
2. A Test Pattern is shown on led interface; **carefully check that ALL led are lit** in sequence from 2 to 8, then current configuration is shown
3. Choose function to set by **SELECT** button; selected led blinks
4. Configure selected function with **ENABLE** button (switch led on/off)
5. Repeat steps 3 and 4 until desired configuration is visualized
6. Keep **CONFIRM** button pressed to authorize the new configuration

6.1 RESET TO FACTORY CONFIGURATION

User can also reset ESPE at factory configuration settings with the following push button action:

1. press and keep pressed CONFIRM button for at least 9 sec. (but less than 30 sec. otherwise the light curtin goes in lockout failure)
2. the leds blink for a while, then the light curtain resets
3. after reset the light curtains begins its normal functioning with the factory configuration

6.2 FUNCTION LIST

The functions that can be chosen in SG2 MUTING are listed in the following tables.

N.B.: the default configuration is indicated in bold characters

Function list			
Function	**Led #**	**Setting**	**Led Status** (PWR, OSSD, EDM, ACM, LEVEL)
Partial muting	2 3	See “Partial Muting Selection” table below	
EDM	4	**Enabled**	○ ○ ○ ● ○ ○ ○ ○
		Disabled	○ ○ ○ ● ○ ○ ○ ○
Restart mode	5	**Auto**	○ ○ ○ ○ ● ○ ○ ○
		Manual	○ ○ ○ ○ ● ○ ○ ○
Muting Direction	6	**T (bidirectional)**	○ ○ ○ ○ ○ ● ○ ○
		L (monodirectional)	○ ○ ○ ○ ○ ● ○ ○
Muting Timeout	7	**10 min**	○ ○ ○ ○ ○ ○ ● ○
		Inf.	○ ○ ○ ○ ○ ○ ● ○
Override Trigger	8	**Level**	○ ○ ○ ○ ○ ○ ○ ●
		Edge	○ ○ ○ ○ ○ ○ ○ ●

Partial Muting Selection			
Muting zone	**LED #**	**Led Status** (PWR, OSSD, EDM, ACM, LEVEL)	**ESPE Zones**
A	Led 2 OFF Led 3 OFF	● ● ● ○ ○ ○ ○ ○	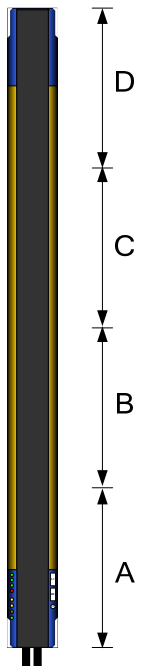
A+B	Led 2 ON Green Led 3 OFF	● ● ● ○ ○ ○ ○ ○	
A+B+C	Led 2 ON Red Led 3 OFF	● ● ● ○ ○ ○ ○ ○	
A+B+C+D	**Led 2 OFF** **Led 3 ON Yellow**	● ● ● ○ ○ ○ ○ ○	
B	Led 2 ON Green Led 3 ON Yellow	● ● ● ○ ○ ○ ○ ○	
C	Led 2 ON Red Led 3 ON Yellow	● ● ● ○ ○ ○ ○ ○	

Tx Function list			
Function	**Led #**	**Setting**	**Led Status** PWR TST SR LR ——CODE——
Range Selection	3	**Long**	○ ○ ● ○ ○ ○ ○ ○
		Short	○ ○ ● ○ ○ ○ ○ ○

7 FUNCTIONS

This chapter deals with all the functions of the light curtain.

7.1 RESTART MODE

An opaque object detected by the beams causes the switching of the OSSD outputs (i.e. the opening of the safety contacts - SAFE condition). The restart mode allows the user to define how the light curtain returns in a Normal Operation condition.
The restart of the ESPE (i.e. the closing of the OSSD safety contacts - SAFE condition) can be carried-out in two different ways: Automatic or Manual Restart.

Automatic Restart: when an opaque object is detected, the ESPE enters in the SAFE condition. Then, after the object has been removed from the controlled area, the ESPE begins its normal functioning again.
The response time is the time between the object introduction in the protected area and the OSSDs achieving the OFF state (SAFE); the recovery time is the time within OSSDs go in the ON state (SAFE) after the object is removed.
These times are function of length and they will be treated later.

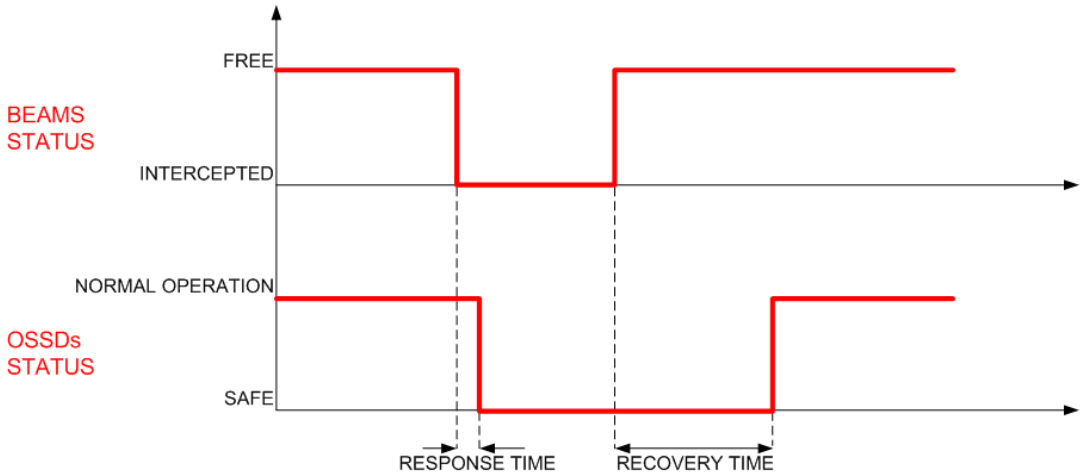

Fig. 28 – Restart timings (auto)

In Automatic Restart the RESET/RESTART/ALIGN input (pin 3 of M12-12 poles – RX side) has to be left floating.

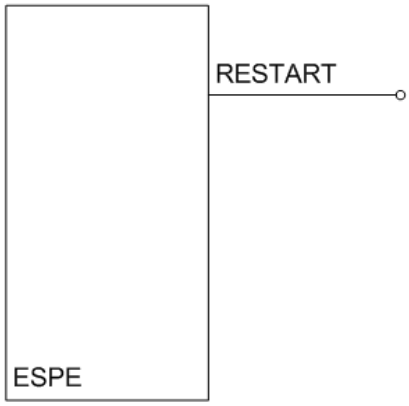

Fig. 29 – Restart connection (auto)

Manual Restart: after the ESPE has detected an opaque object in the controlled area, the light curtain begins its normal functioning only by pressing the Restart button (normal open push button) and after the object has been removed from the controlled area.
The OSSDs go in normal operation state after the RESTART signal goes low, and not after 500msec. A timeout greater than 5s on the high RESTART brings the ESPE in failure lockout.

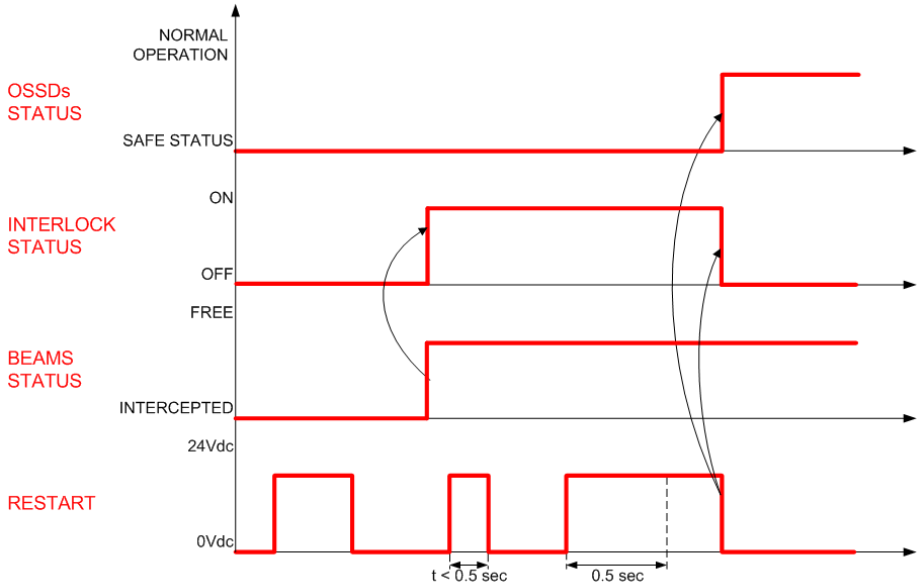

Fig. 30 – Restart timings (manual)

In Manual Restart the RESET/RESTART/ALIGN input (pin 3 of M12-12 poles – RX side) has to be connected to a 24VDC normally-open contact.

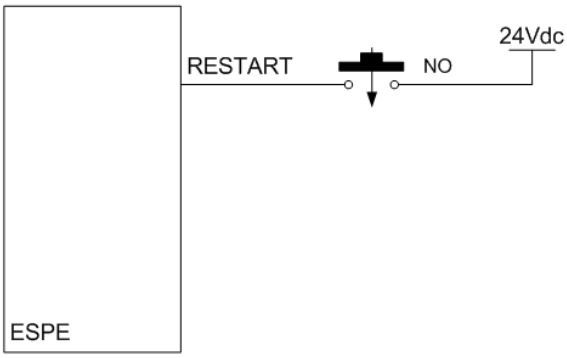

Fig. 31 – Restart connection (manual)

⚠	WARNING: Carefully assess risk conditions and reset modes. In applications protecting access to dangerous areas, the automatic reset mode is potentially unsafe if it allows the operator to pass completely beyond the sensitive area. In this case, the manual reset or, for example, the manual reset of the SE-SR2 relay (see chapter 15) is necessary.

Here below the way to select the restart mode is explained, both through push-button and the graphic user interface.

Restart Mode		
		PWR OSSD EDM ACM LEVEL
Auto	**Led 5 ON Red**	
Manual	Led 5 OFF	

7.2 TEST

The TEST function can be activated by pressing the 24VDC normally-open push-button connected to TX unit TEST input (pin 2 of M12-5 poles) for at least 0.5 seconds.
The TEST disables the emission stage, so the RX side sees interrupted beams (all) and the OSSD goes low within response time. As shown in the timing diagram below, the OSSDs go OFF (BREAK status) after 500msec (plus a cycle time) and after the response time of the light curtain.

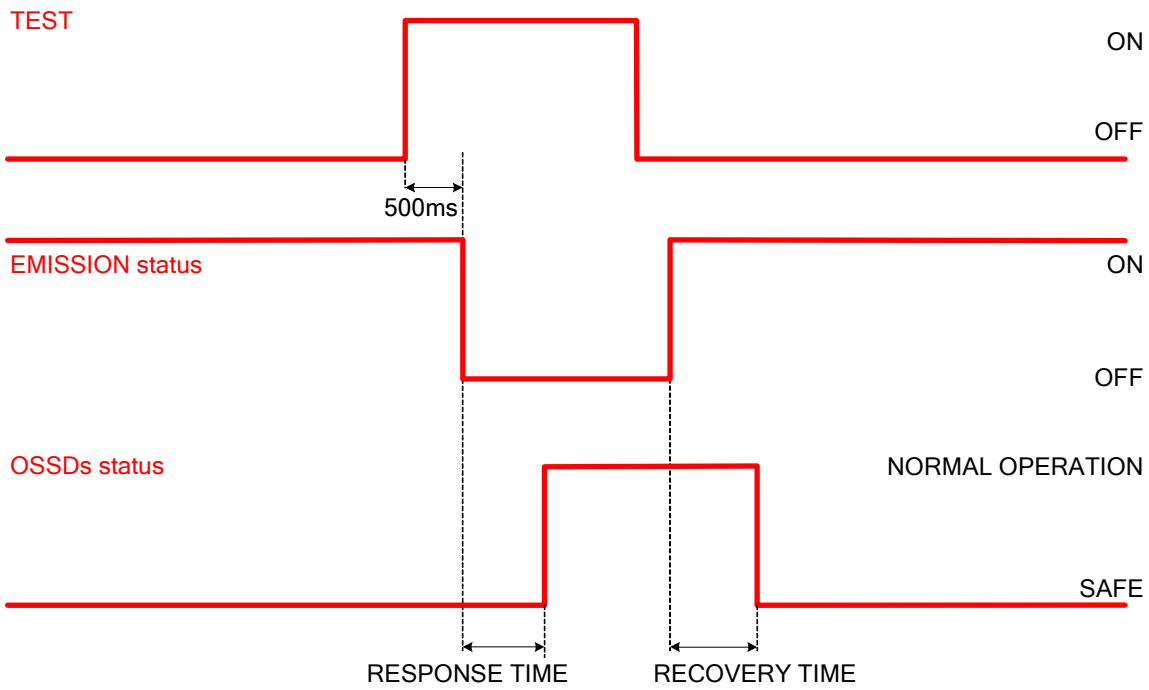

Fig. 32 – Test timings

7.3 RESET

When ESPE locks into failure state user can go back to Normal Operation with a power cycle or using the activation of RESET function (non critical failures only).
To activate RESET function the 24VDC normally-open button connected to RESET/RESTART/ALIGN input (pin 3 of M12-12 poles – RX side) has to be kept pressed for at least 5 seconds in non critical failure state.
For all critical failures a power cycle is necessary.
When in failure state the light curtain can be reset with the procedure explained above except the case of failure on microprocessor, for which a power cycle is necessary.

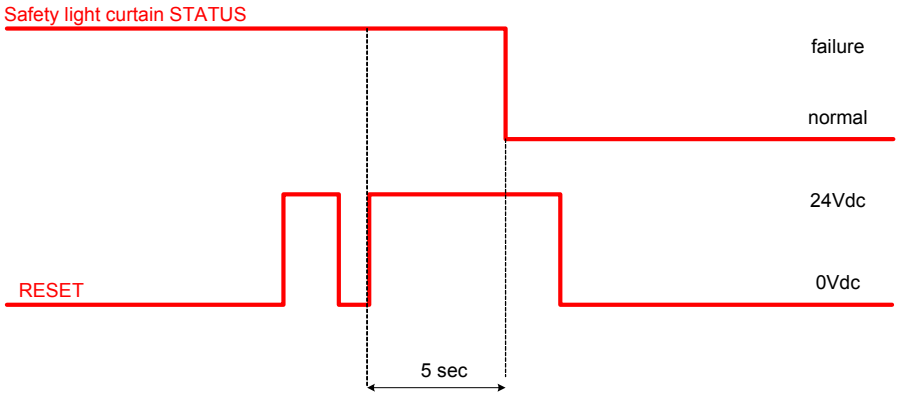

Fig. 33 – Reset timings

If the error is not removed, the light curtain goes in lockout failure again.

7.4 EDM

The External Device Monitoring (EDM) function controls external devices by verifying the OSSDs status.

EDM enabled:
When EDM is enabled it's necessary to connect EDM input (pin 6 of M12-12 poles - RX) to a 24 VDC normally-closed contact of the device to be monitored.
NOTE: in normal operation the third led switched on in the user interface indicates that this function is active.
The next figure indicates how to connect the EDM.

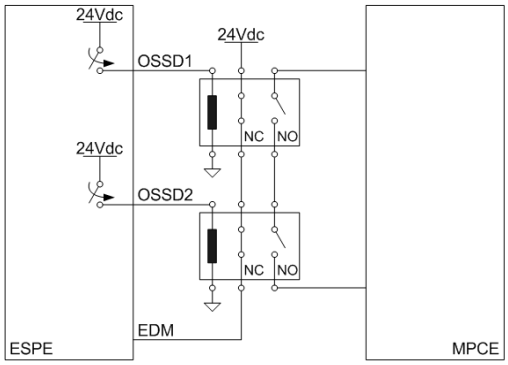

The function controls the 24VDC normally-closed contact switching according to the changes of the OSSDs' status.

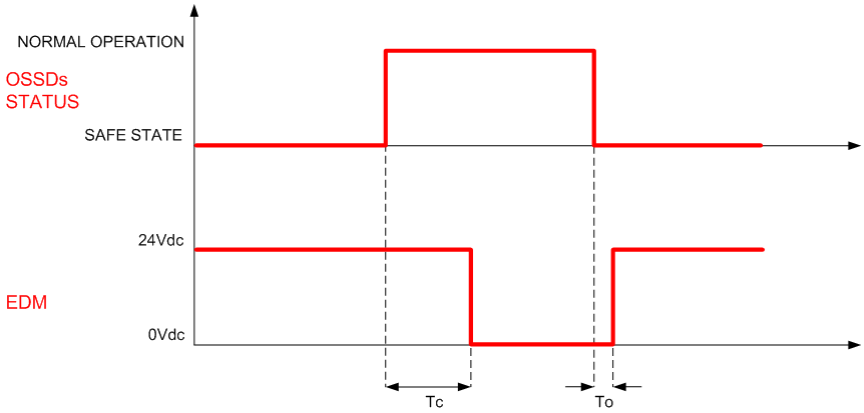

Fig. 34 – EDM timings

The EDM status is antivalent with OSSDs': the timing diagram explains the relationship between the cause (OSSDs) and the effect (EDM) with the maximum permissible delay.

Tc ≥ 350 msec (time between OSSD OFF-ON transition and EDM test)
To ≥ 100 msec (time between OSSD ON-OFF transition and EDM test)

(two different times for the mechanical contact driven by a spring)

EDM disabled:
When EDM is disabled it's necessary to leave the EDM input floating.

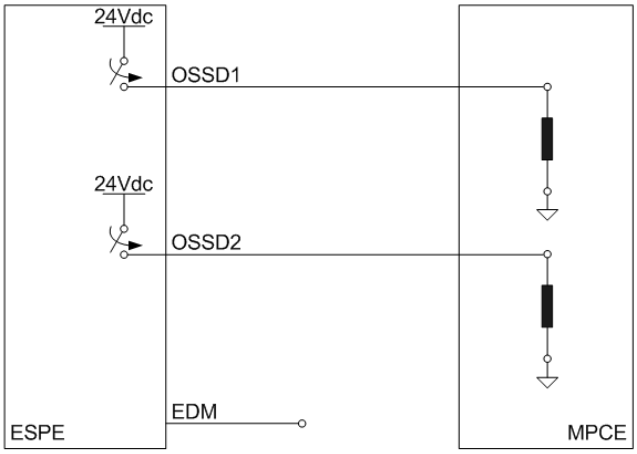

Fig. 35 – EDM connection

7.5 EDM SELECTION

This function lets the user to select or exclude the monitoring of the external switching devices.

EDM Selection		PWR	OSSD	EDM	ACM	LEVEL
Enabled	**Led 4 ON Yellow**	●	○	○	●	○ ○ ○ ○
Disabled	Led 4 OFF	●	○	○	●	○ ○ ○ ○

To increase safety level, when EDM is set OFF, at start-up ESPE checks if EDM input is floating.

7.6 REDUCTION RANGE

This function allows the user to select the maximum operating distance at which the curtains can be mounted.
If TX is configured as Long Range the maximum operating distance is 20m; if TX is configured as Short Range the maximum operating distance is 12m.

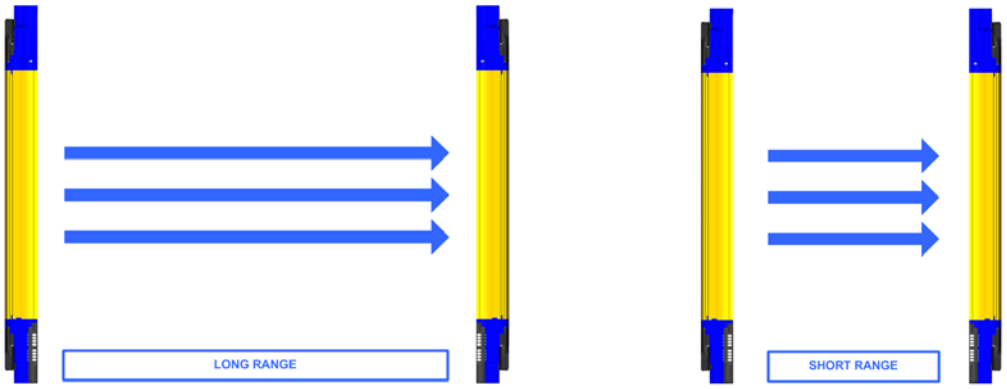

Fig. 36 – Reduction Range

Reduction Range		PWR	TST	SR	LR	CODE
Long	**Led 3 ON Yellow**	●	○	●	○	○ ○ ○ ○
Short	Led 3 OFF	●	○	●	○	○ ○ ○ ○

In particular, if long range is selected TX and RX can be mounted at the maximum allowed operating distance; short range is indicated in those cases in which multiple couples of light curtains have to be mounted near and no code can be used.

7.7 MUTING

Muting function allows automatic deactivation of the safety function on the whole or part of protected height in order to carry out definite cyclical operations without blocking machine work.
As the pertaining safety requirements demand, ESPE is equipped with two muting activation inputs, MUTING1 and MUTING2.
The Muting sensors must be able to recognise the passing material (pallets, vehicles, …) according to material's length and speed. In case of different transport speeds in the Muting area, it is necessary to consider their effect on the total Muting duration.

- The Muting function excludes the light curtain during functioning, maintaining active the OSSDs' outputs, according to particular operating requirements (Fig. 37).

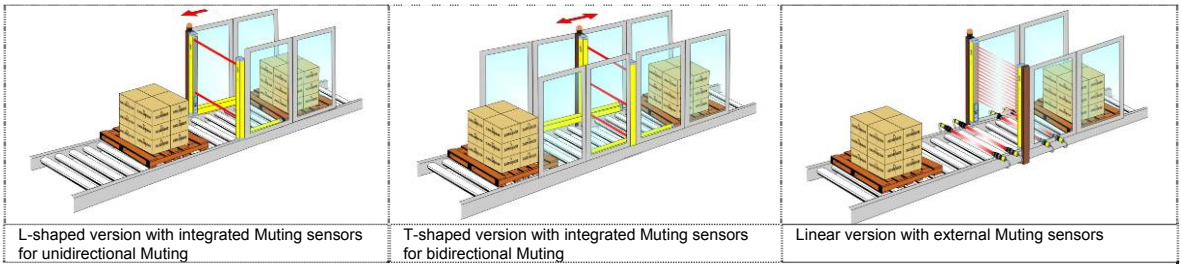

Fig. 37 – Examples of muting application

- The safety light curtain is equipped with two inputs (MUTING1 and MUTING2) for the activation of this function, according to the current Standards.
- This function is particularly suitable when an object, but not a person, has to pass through the dangerous area, under certain conditions.
- It is important to remember that the Muting function represents a forced condition of the system and therefore has to be used with the necessary precautions.
- If MUTING1 and MUTING2 inputs are activated by two Muting sensors or actuators, these should be correctly connected and positioned in order to avoid undesired Muting or potentially dangerous conditions for the operator.
- MUTING1 and MUTING2 can't be activated simultaneously
- State of Muting is signalled by an external Muting Lamp (that can be connected to the light curtains with the pin 10 of the M12-12 poles connector) and by some leds on the user interface. When the Muting function is ON the LAMP and the leds begin to blink.
- During the installation take care to place the lamp in a position as visible as possible.
- If the external lamp is broken and/or not connected, the Muting request causes a SAFE lockout condition and the corresponding failure is signalled.
- If both first and last beams are intercepted by the passing material the light curtain recovery time may be longer. A material moving faster than 1 m/s could lead light curtain to switch in OFF-state at the end of muting sequence.

⚠	**Select carefully the configuration, as a wrong configuration can cause the incorrect functioning of the Muting function and a reduction of the safety level. For correct use of Muting, please refer to the relevant reference standards.**

⚠	**The Muting sensors must be positioned in such a way that the activation of the Muting function is not possible with the accidental passing of a person. Particular attention must be paid to the use of the one-way L-muting mode: the external muting sensors or the SG-L-ARMS muting arms must be positioned so as to allow the passage of the material coming out of the dangerous area protected by the light curtain.**

7.7.1 Muting function disable

During SG2 MUTING operations muting function can be dynamically disabled or enabled: when disabled no valid muting request will be accepted at the MUTINGX inputs and safety function will always be on.
The user can disable the muting function at runtime by setting a high level on the signal MUTING DISABLE (pin 7 of the M12-12 poles connector).

7.7.2 Muting signalling devices

In order to make use of Muting function, it is compulsory to connect a dedicated signalling device (lamp); without it the light curtain goes in failure lock-out state.
Both incandescent and LED lamps are allowed. In case of use of LED lamp, take care to connect it respecting the right polarity .
A Lamp TEST is executed cyclically when the lamp is lighted on in order to guarantee the detection of lack of functionality. If a lamp break is detected, ESPE goes in Lamp Failure Lock-Out state and shows the related message on the display (refer to chapter 11 for informations about the lamp).

7.7.3 Typical muting application and sensor connection

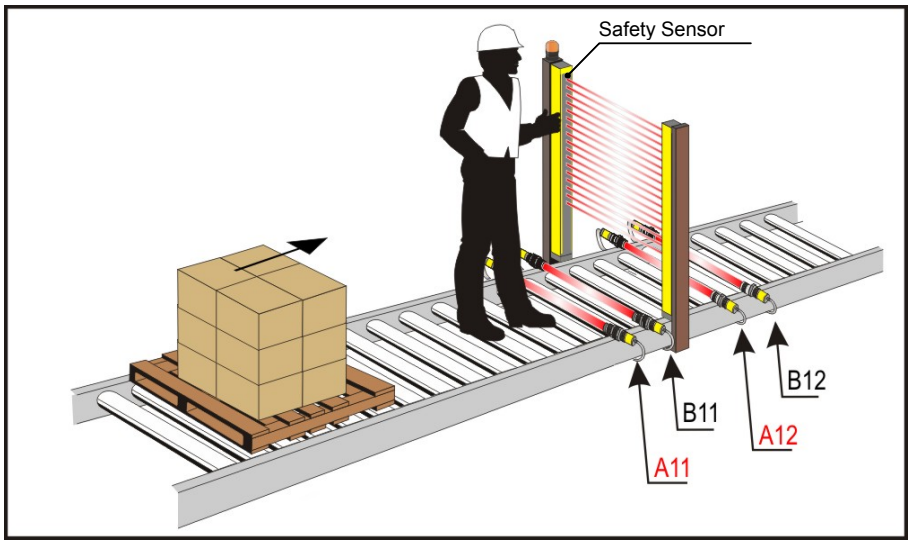

Fig. 38 – Typical Muting Application

The figure above shows a typical muting application: a protection installed on a conveyor should allow the pack passing-by but not the worker. The ESPE temporarily suspends its safety function on a correct activation sequence of A11, A21, A12, A22 sensors.
These sensors can be optical, mechanical, proximity sensors … etc., with high output PNP when the object is detected.

7.7.4 Muting direction

The ESPE can be used with both bidirectional (T type, four sensors) and monodirectional (L type, two sensors) muting.
Bidirectional muting can be used in those applications in which the packs can move in both directions and monodirectional muting can be used in those applications in which the packs move in one direction only.
In BCM the maximum activation delay between MUTING1 and MUTING2 (T12max) is 4 sec.

T muting

In T type operations the device enters muting function if the input MUTING2 goes high within a fixed T12max after the rise of MUTING1 (or viceversa). The muting function ends as soon as the signal on MUTING1 or MUTING2 goes low. A further custom delay (Tdelay) may be set by the user in a 0-1000 ms range. After this time if the user wants to enter in muting has to deactivate the muting input and start the sequence from the beginning.

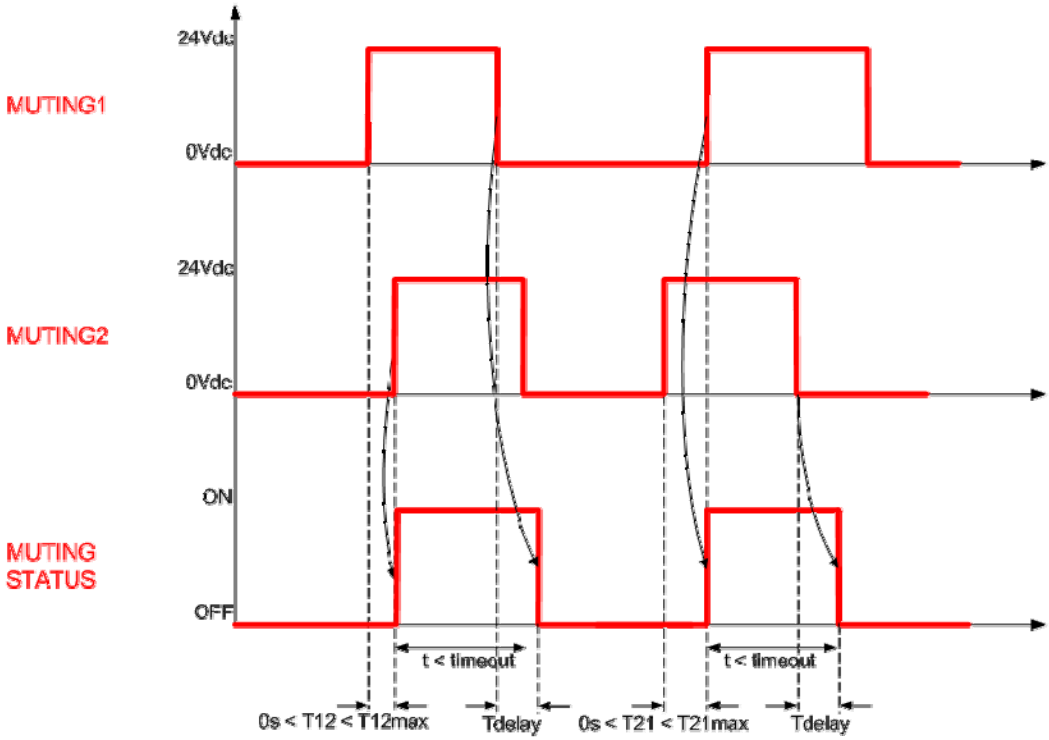

Fig. 39 – T muting timings

The sensors named A1/A2 are connected to the same muting input (MUTING1) and the sensors named B1/B2 are connected to MUTING2. The sensors that end with “1” are on the same side of the light curtain and are on the opposite side of the sensors that end with “2”.

“D” is the distance at which the sensors A1/A2 or B1/B2 have to be mounted; it depends on the package length (L):

$$D < L$$

“d1” is the maximum distance between the muting sensors; it depends on the package speed (V):

$$d1_{max}[cm] = V[m/s] * T12[s] * 100,$$

“d2” is the maximum distance for the muting request to be accepted; it depends on the package speed (V):

$$d2_{max}[cm] = V[m/s] * T12[s] * 100,$$

where “T12” is the activation delay between MUTING1 and MUTING2.

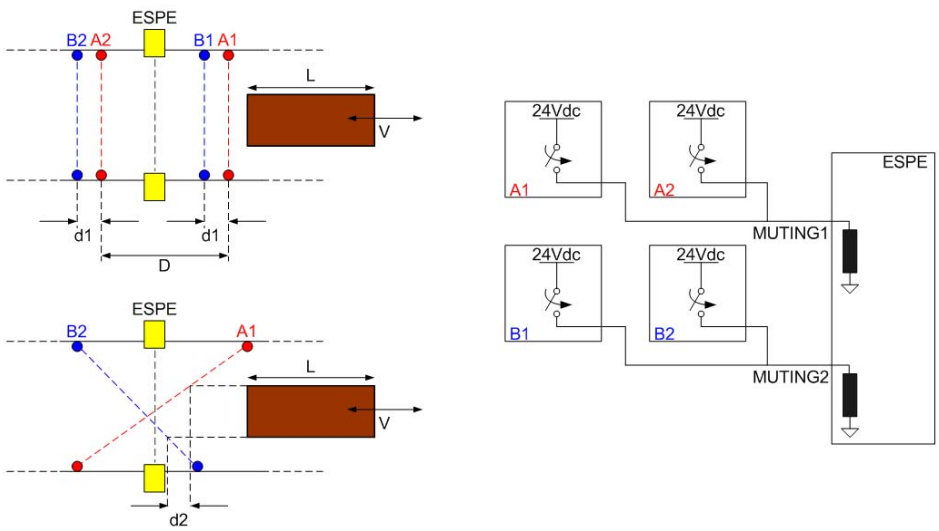

Fig. 40 – T muting connection

L muting

In L type operation the device enters muting function if the inputs go high in a particular order: MUTING1 has to activate first, then MUTING2 can activate; if MUTING2 activates before MUTING1, the device doesn't enter the muting function.
"T12" is the activation delay between MUTING1 and MUTING2.
The muting function ends after a time that is 2 * T12.
After this time if the user wants to enter in muting has to deactivate the muting input and start the sequence from the beginning.

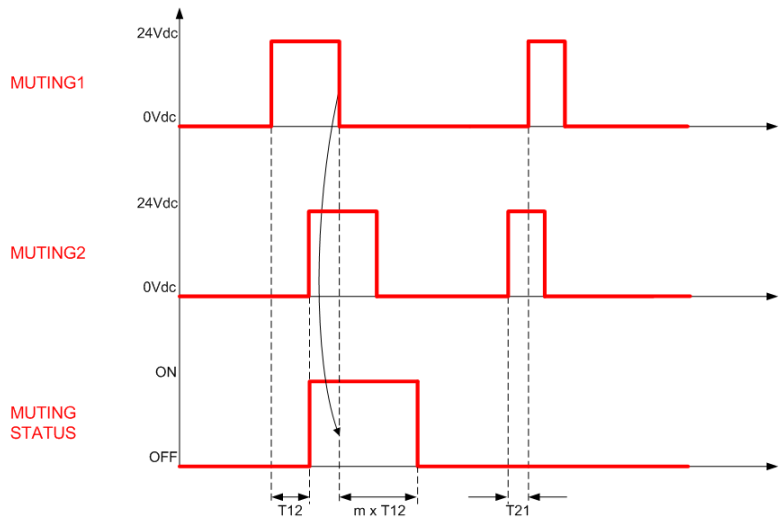

Fig. 41 – L muting timings

The sensor named A is the farthest from the light curtain, so its beam is intercepted first. Making reference to the next figure, since the pack goes from right to left only, B sensor can't be intercepted first; if this happens the device doesn't enter muting function.
"V" indicates a constant speed. As a consequence, "d1" is fixed according to the following formula:

$$d1[cm] = V[m/s] * T12[s] * 100$$

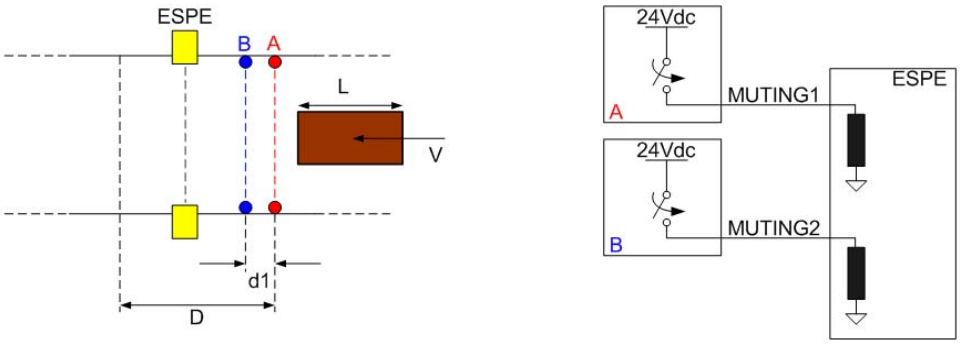

Fig. 42 – L muting connection

Muting Direction		PWR OSSD EDM ACM LEVEL
T (bidirectional)	**Led 6 ON Green**	
L (monodirectional)	Led 6 OFF	

7.7.5 Muting timeout

Muting timeout is a time that defines the maximum duration of muting function; after the timeout the muting ends.

The user can select a timeout of 10 minutes or infinite; “infinite” means that muting timeout could never end: if the conditions of muting persist, the muting function still continues to exist. This is not compliant with the 61496-1 rule and the user is warned about it.

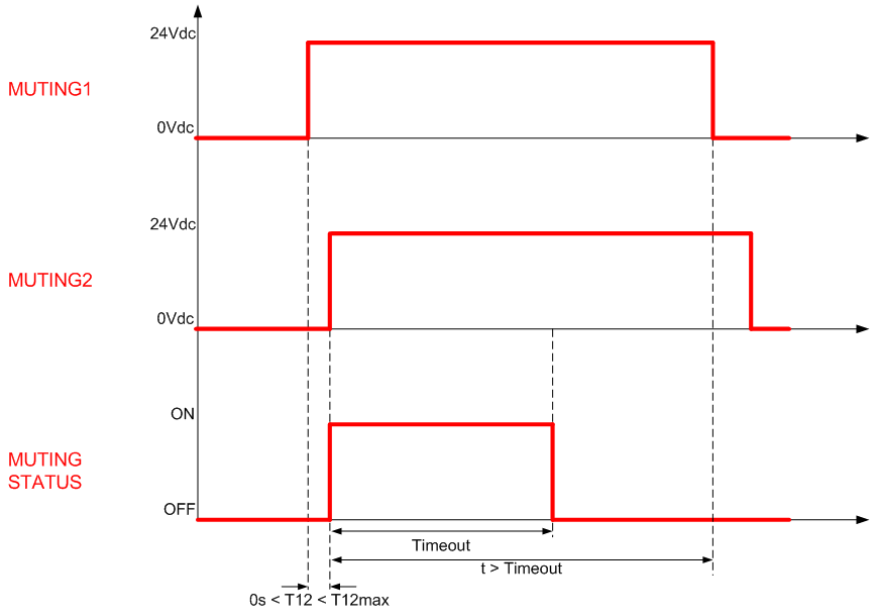

Fig. 43 – Muting timeout

Muting Timeout		
		PWR OSSD EDM ACM LEVEL
10 min	**Led 7 ON Green**	
infinite	Led 7 OFF	

Note: Infinite is not 61496-1 compliant!

7.7.6 Partial muting

It's possible to configure the type of muting: total or partial. Partial muting can be useful in those applications in which the user wants to limit the muting function effects to selected zones only.
Hereafter the table that resumes the configuration in case of partial muting is presented.

Partial Muting Selection			
Muting zone	**LED #**	**LED** PWR OSSD EDM ACM LEVEL	**ESPE Zones**
A	Led 2 OFF Led 3 OFF		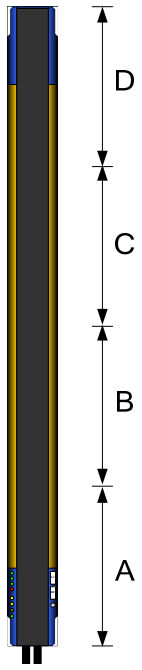
A+B	Led 2 ON Green Led 3 OFF		
A+B+C	Led 2 ON Red Led 3 OFF		
A+B+C+D	**Led 2 OFF** **Led 3 ON Yellow**		
B	Led 2 ON Green Led 3 ON Yellow		
C	Led 2 ON Red Led 3 ON Yellow		

7.8 OVERRIDE

Override function allows the user to force safety function deactivation whenever it's necessary to restart the machine despite one or more ESPE beams are intercepted. The aim is clearing protected area of any working materials blocked ahead of ESPE because of (i.e.) a cycle anomaly.

Override redundant inputs have to be connected to a 24VDC normally-open contact and to a GND normally-open contact.
As the pertaining requirements request ESPE is equipped with two Override activation inputs: OVERRIDE1 and OVERRIDE2 (respectively, pin 4 of the M12-12 poles connector and pin 9 of the M12-12 poles connector – RX).

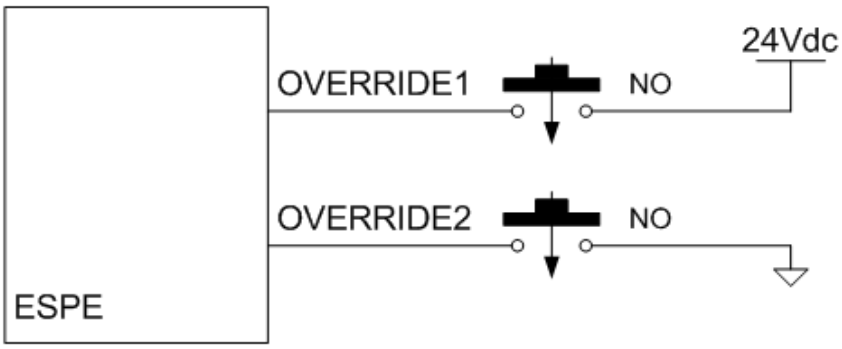

Fig. 44 – Override connection

Necessary condition for override request to be accepted is: ESPE in SAFE state and at least one muting sensor intercepted.
When such condition is verified user interface visualizes "override attention status" with both red OSSD led and alignment leds blinking.

OVERRIDE ATTENTION STATUS	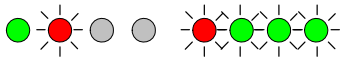

Then, an override request is accepted only if signals at OVERRIDE X inputs follow the timings shown hereafter.
Override function will automatically end when one of the following conditions is present:

- all the muting sensors are deactivated (in a T-muting configuration)
- all the muting sensors are deactivated AND no beams are intercepted (in a L-muting configuration)
- the pre-determined time limit has expired
- the requirements for actuation aren't met anymore (for example, one override input is deactivated)

7.8.1 Override mode

It's possible to configure the trigger of override inputs: Level or Edge.

As explained in diagrams below two types of override trigger sequence are accepted on external inputs:

- **Level Trigger:** override engaged until both contacts are closed AND at least one muting sensor is intercepted.
  OVERRIDE STATUS is an output signal that informs the user if the override inputs are active with override conditions present.

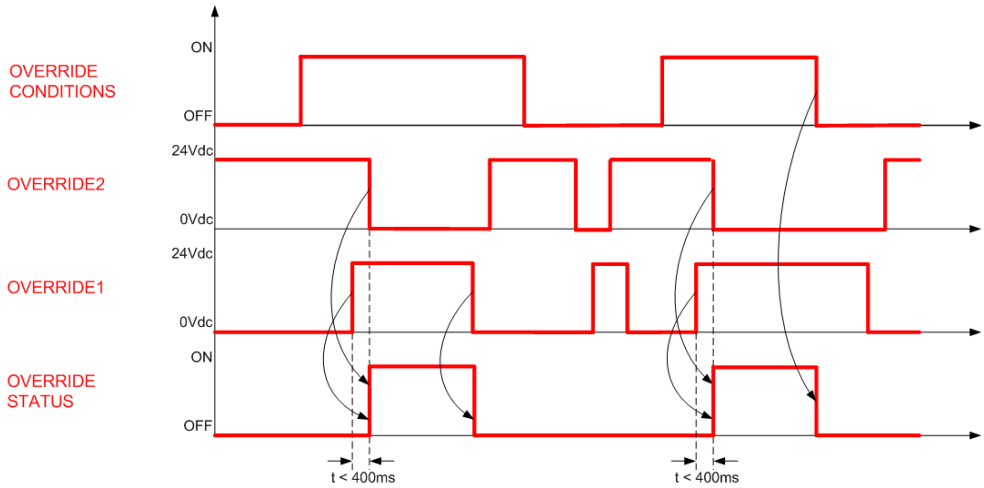

Fig. 45 – Override timings (level trigger)

- **Edge Trigger:** override engaged on contacts closing until at least one muting sensor is intercepted. In this case the override state rests even if the override contacts are released. The device exits the override state when one of the following events happens:
- the muting sensors are deactivated (T-muting) or the muting sensor are deactivated AND no beams are intercepted (L-muting)
- the timeout expires
- OVERRIDE STATUS is an output signal that informs the user if the override inputs are active with override conditions present.

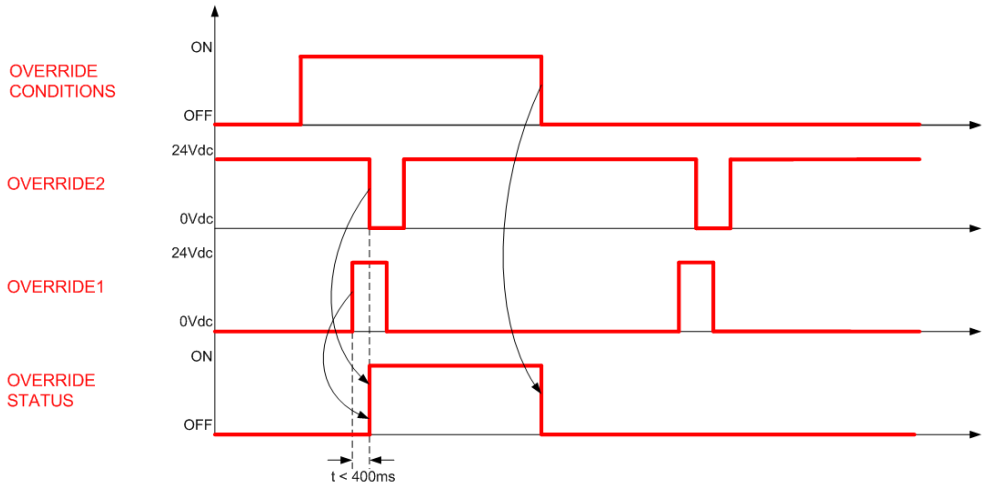

Fig. 46 – Override timings (edge trigger)

Override Mode		PWR OSSD EDM ACM LEVEL
Level	**Led 8 ON Green**	
Edge	Led 8 OFF	

7.8.2 Override timeout

Override status timeout is 120s: if Override conditions remain active and both Override contacts remain closed (this condition only in Level Trigger Mode) more than 120s, the Override goes low in any case after a maximum of 120s.

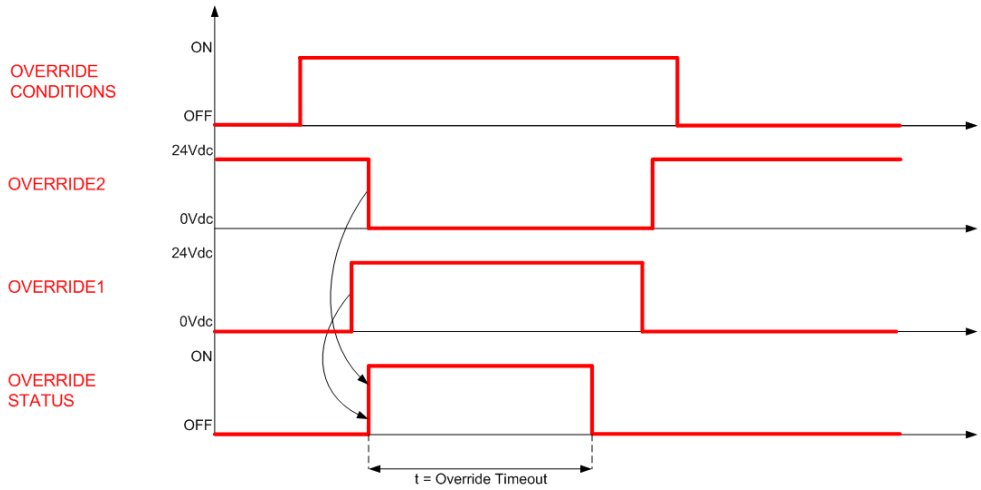

Fig. 47 – Override timeout timings

8 DIAGNOSTIC

8.1 USER INTERFACE

In the left side of user control panel (on both units of light curtains) an 8 leds user interface helps customer to control and check the state of the light curtain, for alignment mode, normal operation and for troubleshooting activity. User interface allows the user to understand which is the configuration set with the push buttons.

RX SIDE:

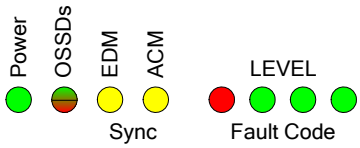

ESPE WORKING MODE	INDICATION	LED CONFIGURATION (Off / On / Blink / Indifferent)	SUGGESTED ACTION
ALIGNMENT	NOT ALIGNED		
	1ST SYNC ENGAGED		
	LAST SYNC ENGAGED		
	MININUM SIGNAL LEVEL		
	MAXIMUM SIGNAL LEVEL		
NORMAL OPERATION MANUAL RESTART ONLY	INTERLOCK FREE BEAMS		user can restart device in normal operation activating RESTART line
	INTERLOCK INTERRUPTED BEAMS		user must free protected area before activating RESTART line
NORMAL OPERATION	OSSD ON (MAXIMUM ALIGNMENT)		
	LEVEL SIGNAL ON BEAMS	None Insufficient Low Good Best	
	EDM ACTIVE		

ESPE WORKING MODE	INDICATION	LED CONFIGURATION Off On Blink Indifferent	SUGGESTED ACTION
NORMAL OPERATION (MUTING)	MUTING ACTIVE		if unexpected OSSD OFF with muting active, check partial muting configuration
	OVERRIDE ACTIVE		
	OVERRIDE ATTENTION STATUS		trigger override button to force OSSDs ON
	OVERRIDE TIMINGS FAILURE		check and repeat override activation sequence check override connections
	LAMP FAILURE		check if lamp connections and/or if lamp is broken
FAILURE INFORMATION	FAILURE ON OSSDS		Activate RESET line. If error persists contact Datalogic Automation Technical Support
	FAILURE ON MICROPROCESSOR		Activate RESET line. If error persists contact Datalogic Automation Technical Support
	FAILURE ON OPTICS		Activate RESET line. If error persists contact Datalogic Automation Technical Support
	FAILURE ON EDM		Check EDM feedback line and EDM configuration. Activate RESET line
	FAILURE ON RESTART		Check RESTART line connection. Activate RESET line
	COMUNICATION FAILURE		Check the correct mounting of terminator cap. Activate RESET line
	BCM CONFIGURATION FAILURE		Re-operate Basic Configuration. If error persists contact Datalogic Automation Technical Support
	CRITICAL FAILURE		Turn ON/OFF ESPE. If error persists contact Datalogic Automation Technical Support
	POWER SUPPLY FAILURE		Check Power Supply Connection. If error persists contact Technical Support

A critical failure can't be re-established with a Reset procedure but it's necessary to switch-off and switch-on the light curtain; if the failure persists, please contact the Datalogic Technical Support.

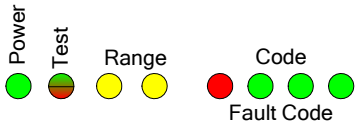

TX SIDE:

ESPE WORKING MODE	INDICATION	LED CONFIGURATION (Off / On / Blink / Indifferent)	SUGGESTED ACTION
NORMAL OPERATION	SHORT RANGE EMISSION		
	LONG RANGE EMISSION		
	TEST		if undesired Test, check TEST line connection
	EMISSION		
FAILURE	FAILURE ON MICROPROCESSOR		Activate RESET line. If error persists contact Datalogic Automation Technical Support
	FAILURE ON OPTICS		Activate RESET line. If error persists contact Datalogic Automation Technical Support
	BCM CONFIGURATION FAILURE		Re-operate Basic Configuration. If error persists contact Datalogic Automation Technical Support
	COMUNICATION FAILURE		Check the correct mounting of terminator cap. Activate RESET line
	CRITICAL FAILURE		Turn ON/OFF ESPE. If error persists contact Datalogic Automation Technical Support

A critical failure can't be re-established with a Reset procedure but it's necessary to switch-off and switch-on the light curtain; if the failure persists, please contact the Datalogic Technical Support.

9 PERIODICAL CHECKS

The following is a list of recommended check and maintenance operations that should be periodically carried-out by qualified personnel (see also par 2.2.5).

Check that:

- The ESPE stays in SAFE state during beam interruption along the entire protected area, using the specific Test Piece (TP-30)
- The ESPE is correctly aligned. Press slightly product side, in both directions and the red LED (named OSSD on RX side) must not turn ON
- Enabling the TEST function (on TX side), the OSSD outputs should open (the red LED, OSSD on RX side, is ON and the controlled machine stops)
- The response time upon machine STOP (including response time of the ESPE and of the machine) is within the limits defined for the calculation of the safety distance (see chapter 2)
- The safety distance between the dangerous areas and the ESPE are in accordance with the instructions included in chapter 2
- Access of a person between ESPE and machine dangerous parts is not possible nor it is possible for him/her to stay there
- Access to the dangerous area of the machine from any unprotected area is not possible
- The ESPE and the external electrical connections are not damaged

The frequency of checks depends on the particular application and on the operating conditions of the safety light curtain.

9.1 GENERAL INFORMATION AND USEFUL DATA

Safety MUST be a part of our conscience.

The safety devices fulfil their safety function only if they are correctly installed, in accordance with the Standards in force. If you are not certain to have the expertise necessary to install the device in the correct way, Datalogic Automation Technical Support is at your disposal to carry out the installation.

The device uses fuses that are not self-resetting. Consequently, in presence of short-circuits causing the cut-off of these fuses, both units shall be sent to Datalogic Automation Technical Support department.

A power failure caused by interferences may cause the temporary opening of the outputs, but the safe functioning of the light curtain will not be compromised.

9.2 WARRANTY

DATALOGIC AUTOMATION guarantees each brand new SG system, under standard use conditions, against manufacturing defects in material and workmanship for a period of 36 (thirty-six) months from the date of manufacturing.
DATALOGIC AUTOMATION will not be liable for any damages to persons and things caused by wrong installation modes or device use.
Warranty validity is subject to the following conditions:

- User shall notify DATALOGIC AUTOMATION the failure within thirty-six months from product manufacturing date
- Failure or malfunction shall not have been originated directly or indirectly by:
- use for unsuitable purposes;
- failure to comply with the intended use prescriptions;
- negligence, unskillfulness, wrong maintenance;
- repairing, changes, adaptations not made by DATALOGIC AUTOMATION personnel, tampering with the device, etc.;
- accidents or crashes (even due to transportation or by force majeure causes);
- other causes not depending from DATALOGIC AUTOMATION

If the device does not work, send both units (receiver and emitter) to DATALOGIC AUTOMATION.
The Customer is responsible for all transport charges and damage risks or material loss during transport, unless otherwise agreed.
All replaced products and parts become a property of DATALOGIC AUTOMATION.
DATALOGIC AUTOMATION does not accept any warranty or right other than the above-described ones. No requests for compensation for expenses, activities stop or other factors or circumstances somehow connected to the failure of the product or one of its parts to operate cannot be put forward for any reason.

In case of problems, please contact DATALOGIC AUTOMATION Service Department.

Service Department
Tel.: +39 051 6765611
Fax.: +39 051 6759324
email: info.automation@datalogic.com

10 DEVICE MAINTENANCE

SG2 safety light curtains do not require special maintenance operations.
To avoid the reduction of the operating distance, optic protective front surfaces must be cleaned at regular intervals.
Use soft cotton cloths damped in water. Do not apply too much pressure on the surface in order to avoid making it opaque.

Please do not use on plastic surfaces or on light curtain painted surfaces:

- alcohol or solvents
- wool or synthetic cloths
- paper or other abrasive materials

10.1 PRODUCT DISPOSAL

Under current Italian and European laws, DATALOGIC S.p.A. is not obliged to take care of product disposal at the end of its life.
DATALOGIC S.p.A. recommends to dispose of the product in compliance with local laws or contact authorised waste collection centres.

11 TECHNICAL DATA

ELECTRICAL DATA	
Power supply (Vdd):	24 Vdc ± 20%
Unit current draw (TX):	3 W max
Unit current draw (RX):	5 W max (without load)
Outputs:	2 PNP
Short-circuit protection:	1.4 A max
Output current:	0.5 A max / each output
Output voltage – status ON:	Vdd –1 V min
Output voltage – status OFF:	0.2 V max
Capacitive load	2.2 uF @ 24Vdc max
Response times:	See table below
Recovery time:	typ. 100ms *
Controlled height:	300..1800mm
Safety category:	Type 2 (ref. EN 61496-1) SIL 2 (ref. EN 61508) SIL CL 2 (ref. EN 62061) PL d, Cat. 2 (ref. IEC 13849-1 2008) PFHd [1/h] = 1,04E -08 MTTFd [years] = 273
Auxiliary functions:	test; manual/automatic restart; EDM; reset; muting;
Electrical protection:	Class I / Class III
Current for External Lamp:	20mA min; 300 mA max
Connections:	M12 12-poles + M12 5-poles for receiver M12 5-poles for emitter
Cables length (for power supply):	50 m. max
OPTICAL DATA	
Emitting light (λ):	Infrared, LED (950 nm)
Resolution:	30 mm
Operating distance:	0.2…20 m
Ambient light rejection:	IEC-61496-2
MECHANICAL AND ENVIRONMENTAL DATA	
Operating temperature:	0…+ 50 °C
Storage temperature:	- 25…+ 70 °C
Temperature class:	T6
Humidity:	15…95 % (no condensation)
Mechanical protection:	IP 65 (EN 60529)
Vibrations:	Width 0.35 mm, Frequency 10 … 55 Hz 20 sweep per axis, 1octave/min (EN 60068-2-6)
Shock resistance:	16 ms (10 G) 1,000 shocks per axis (EN 60068-2-29)
Housing material:	Painted aluminium (yellow RAL 1003)
Front side material:	PMMA
Caps material:	PBT Valox 508 (pantone 072C)
Cover material:	PC LEXAN
Weight:	1.35 kg per linear meter for single unit

* Recovery Time may be longer if both first and last optics are intercepted

12 LIST OF AVAILABLE MODELS

Model	Controlled height (mm)	No. Beams	Response time (msec)	Resolution (mm)
SG2-30-030-OO-W	300	16	13	30
SG2-30-045-OO-W	450	24	14	30
SG2-30-060-OO-W	600	32	15	30
SG2-30-075-OO-W	750	40	16	30
SG2-30-090-OO-W	900	48	17	30
SG2-30-105-OO-W	1050	56	18	30
SG2-30-120-OO-W	1200	64	19	30
SG2-30-135-OO-W	1350	72	19	30
SG2-30-150-OO-W	1500	80	20	30
SG2-30-165-OO-W	1650	88	21	30
SG2-30-180-OO-W	1800	96	22	30

13 OVERALL DIMENSIONS

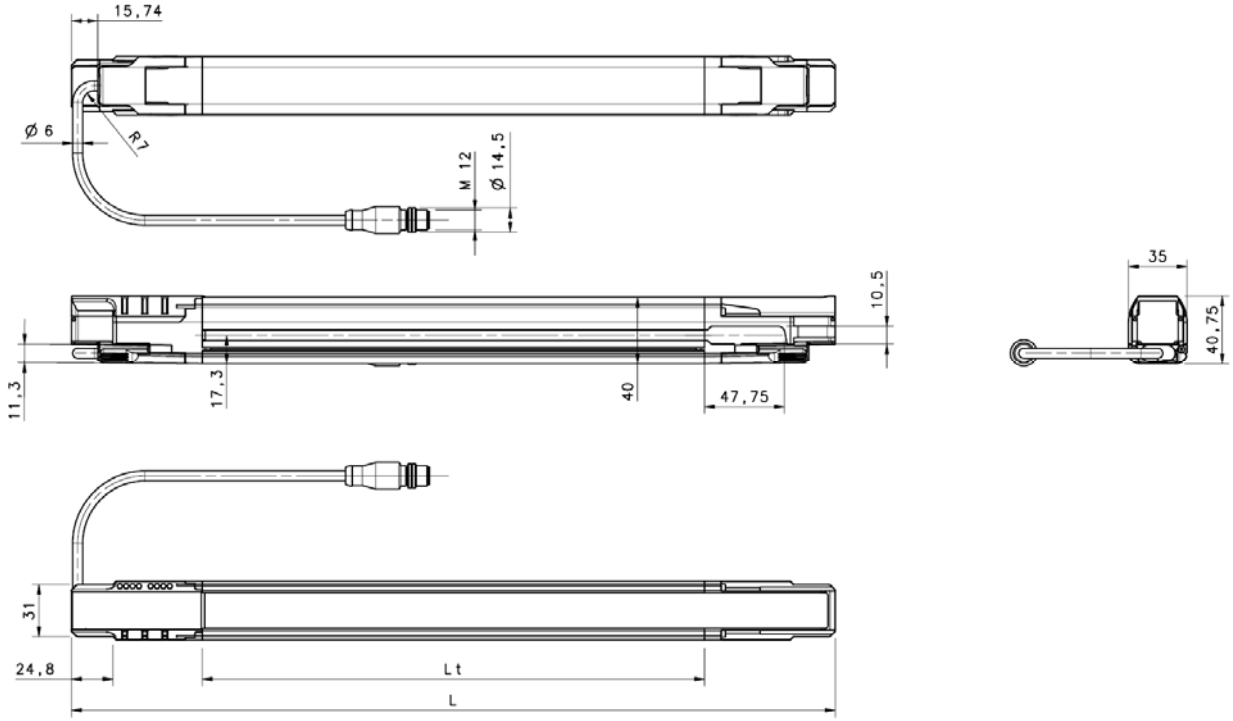

MODEL	L_t (mm)	L (mm)
SG2-30-030-OO-W	150	306,3
SG2-30-045-OO-W	300	456,3
SG2-30-060-OO-W	450	606,3
SG2-30-075-OO-W	600	756,3
SG2-30-090-OO-W	750	906,3
SG2-30-105-OO-W	900	1056,3
SG2-30-120-OO-W	1050	1206,3
SG2-30-135-OO-W	1200	1356,3
SG2-30-150-OO-W	1350	1506,3
SG2-30-165-OO-W	1500	1656,3
SG2-30-180-OO-W	1650	1806,3

14 OUTFIT

Angled fixing bracket (with threaded pins metallic insert)

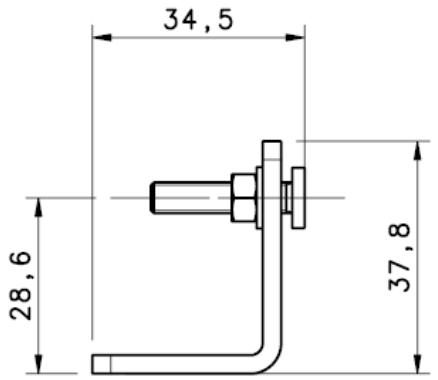

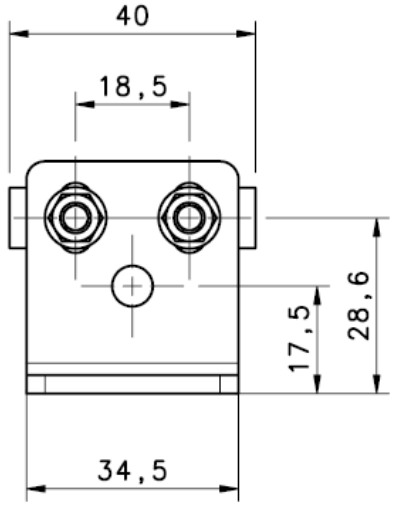

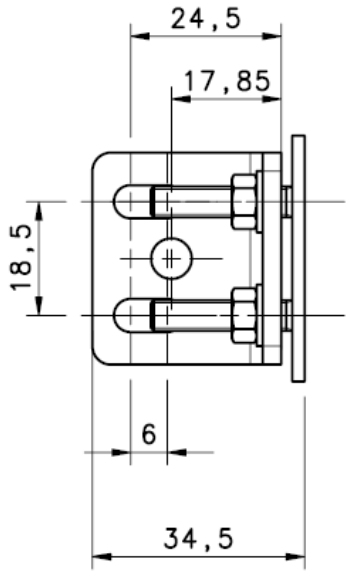

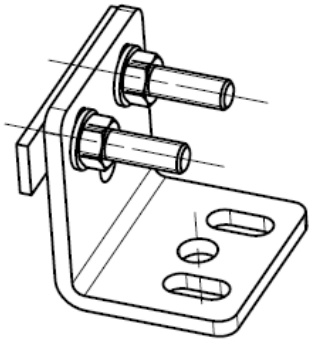

Terminator cap (CVL-5196)

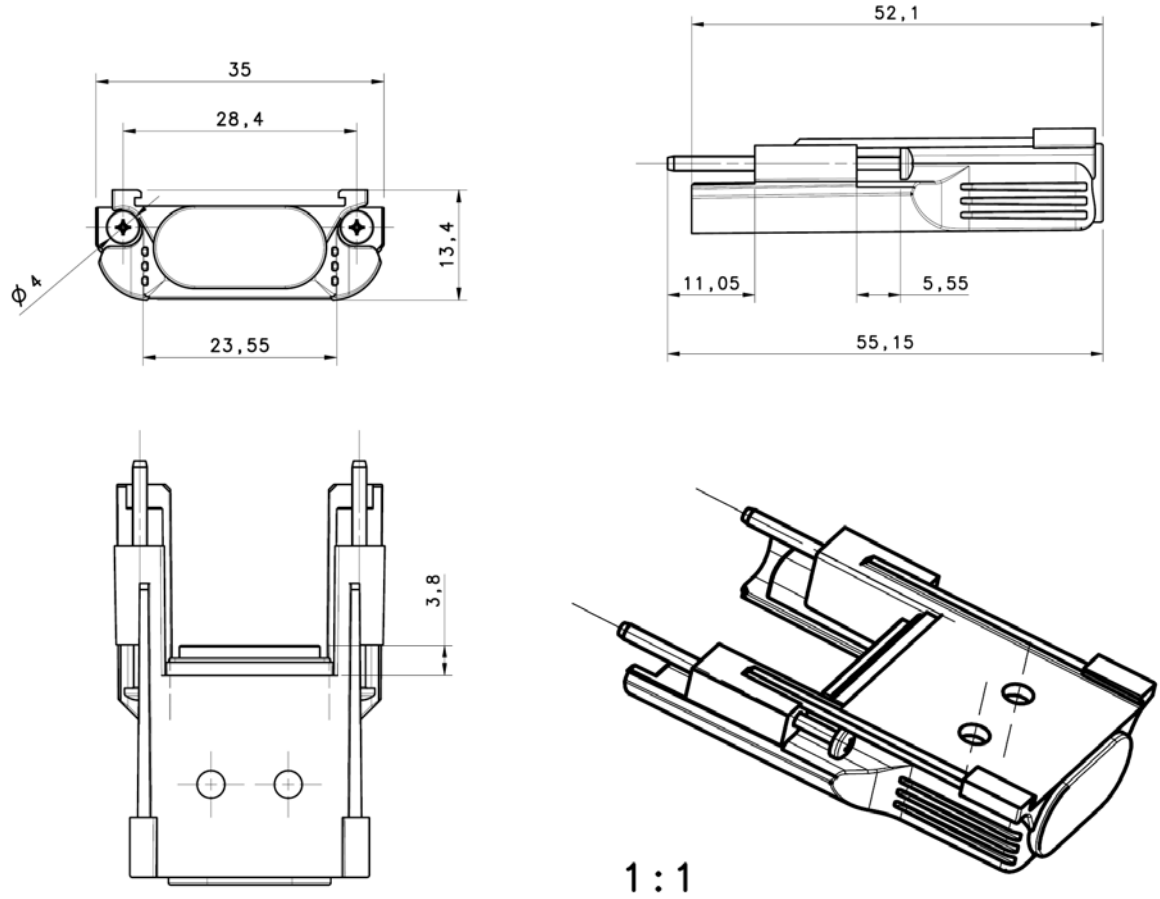

Tool for BCM configuration

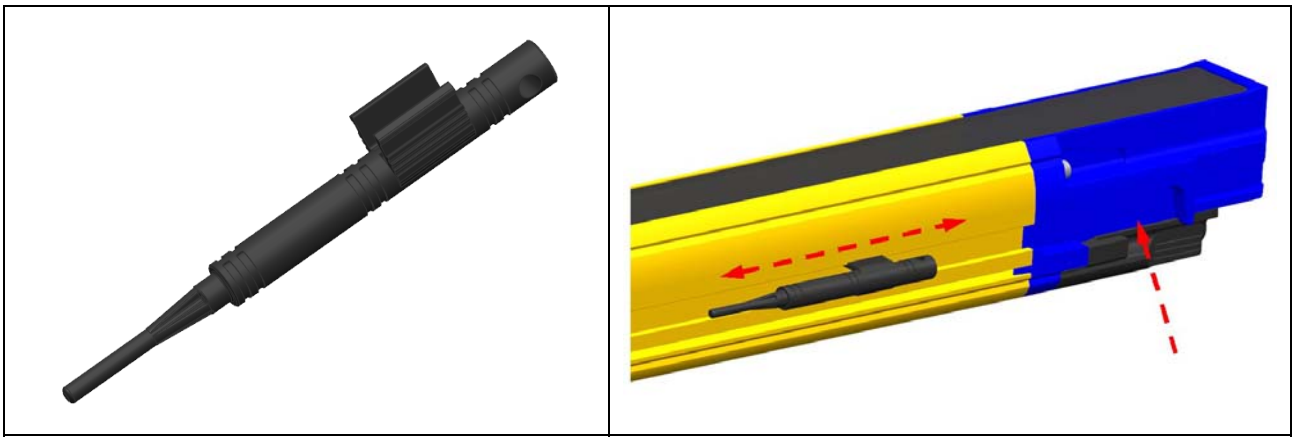

The tool for BCM configuration, when not used, can be inserted in the profile groove by making it enter from the top of the light curtain
.

15 ACCESSORIES

15.1 BRACKETS FIXING

Metal angled fixing bracket

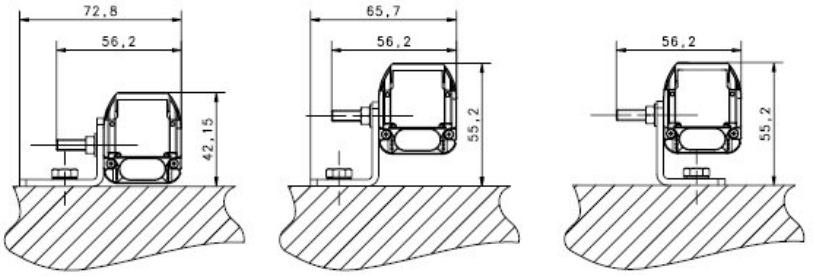

Angled fixing bracket

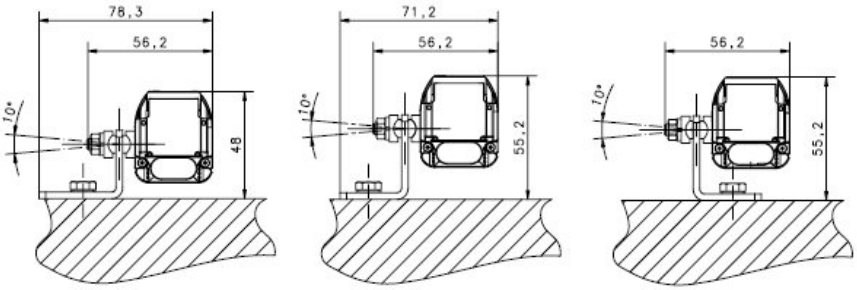

Angled fixing bracket + Orientable support

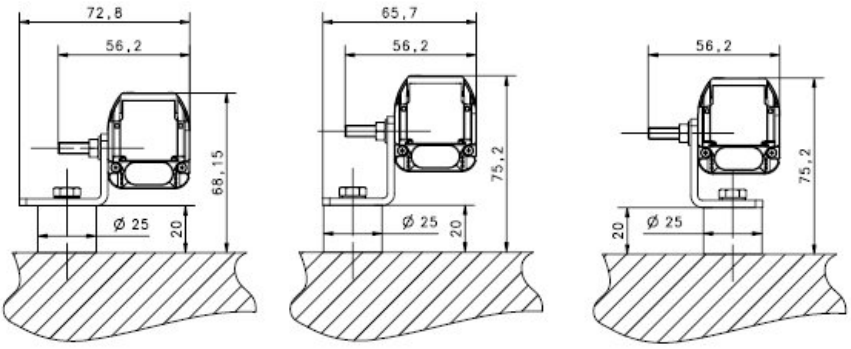

Angled fixing bracket + Antivibration support

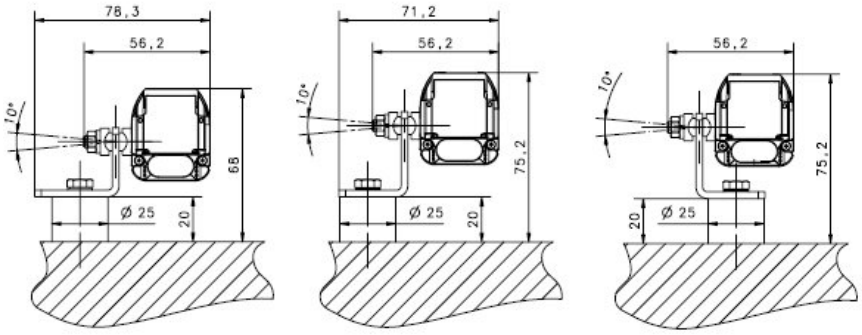

Angled fixing bracket + Orientable support + Antivibration support

MODEL	DESCRIPTION	CODE
ST-KSTD	Fixing brackets (4 pcs kit)	95ACC1670
ST-K4OR	Orientable supports (4 pcs kit)	95ACC1680
ST-K6OR	Orientable supports (6 pcs kit)	95ACC1690
ST-K4AV	Antivibration supports (4 pcs kit)	95ACC1700
ST-K6AV	Antivibration supports (6 pcs kit)	95ACC1710

Plastic angled fixing bracket

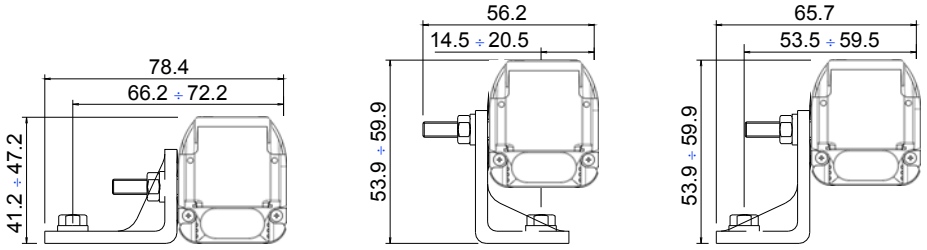

Fixing bracket

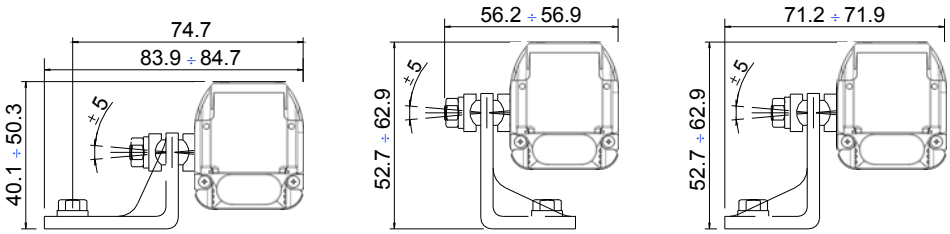

Fixing bracket + Orientable support

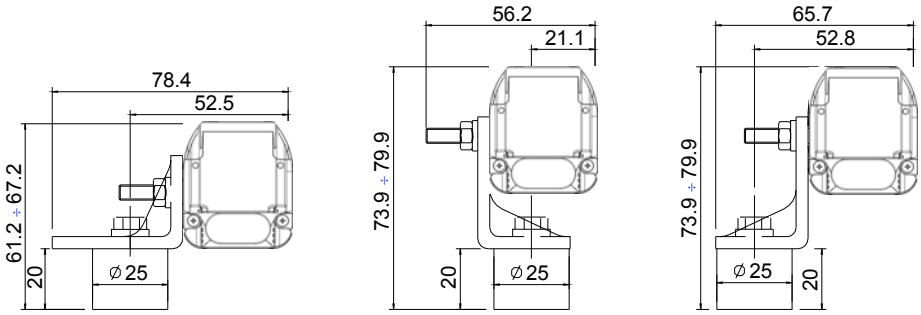

Fixing bracket + Antivibration support

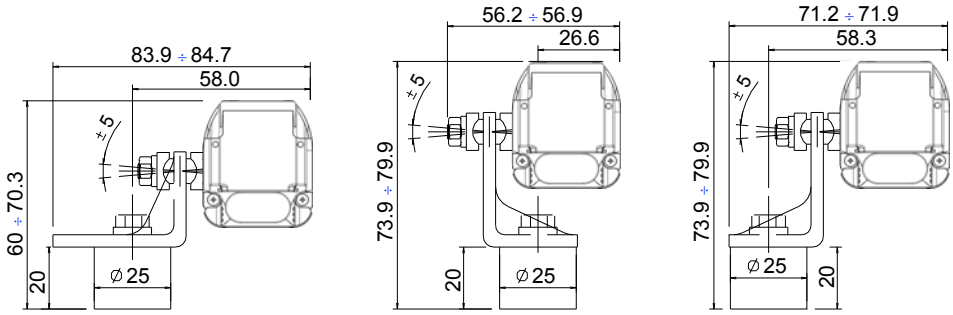

Fixing bracket + Orientable support + Antivibration support

MODEL	DESCRIPTION	CODE
ST-KP4MP	Fixing brackets (4 pcs kit)	95ASE1100
ST-KP6MP	Fixing brackets (6 pcs kit)	95ASE1110

15.2 MUTING LAMP

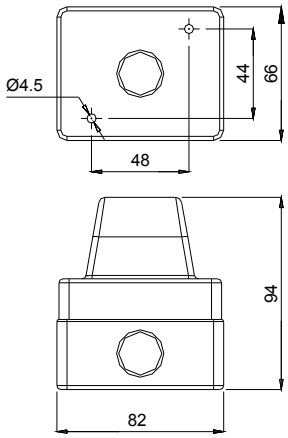

LMS

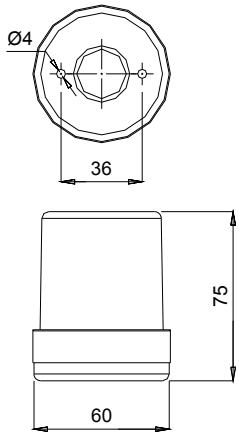

LAMPADA LMS-2

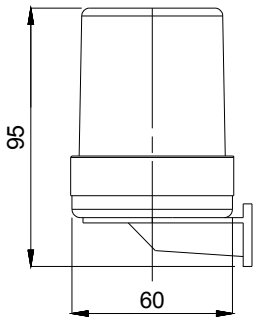

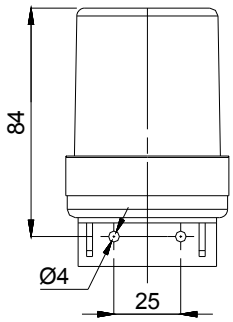

LAMPADA LMS-3

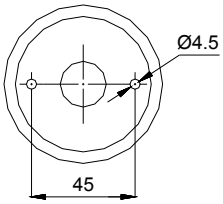

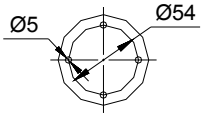

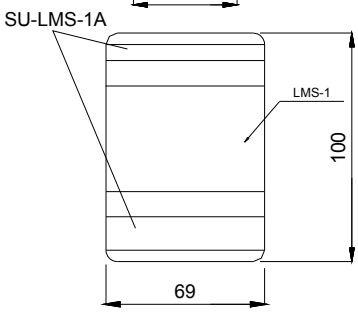

MODULO SU-LMS-1A + LMS-1

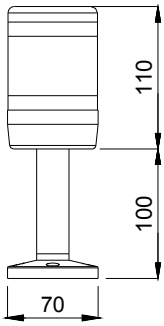

SUPPORTO SU-LMS-1B + LMS-1

MODEL	DESCRIPTION	CODE
LMS	Muting lamp	95ASE1830
LMS-1	Modular Muting lamp	95ACC1990
LMS-2	Muting lamp - horizontal mounting	95ACC2000
LMS-3	Muting lamp - vertical mounting	95ACC2010
SU-LMS-1A	Basic module for LMS-1	95ACC2020
SU-LMS-1B	Tower module for LMS-1	95ACC2030

15.3 DEVIATING MIRRORS

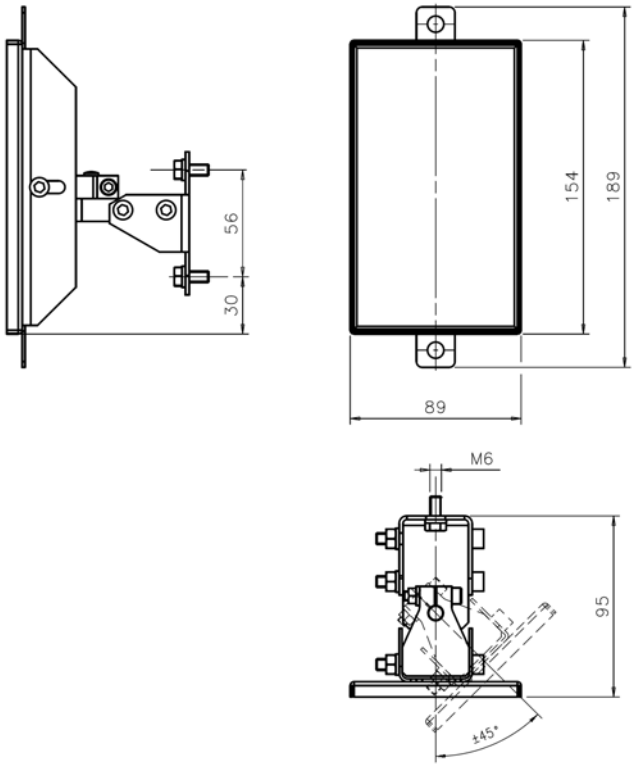

MODEL	DESCRIPTION	CODE
SG-DM 150	Deviating mirror version 150 mm	95ASE1670

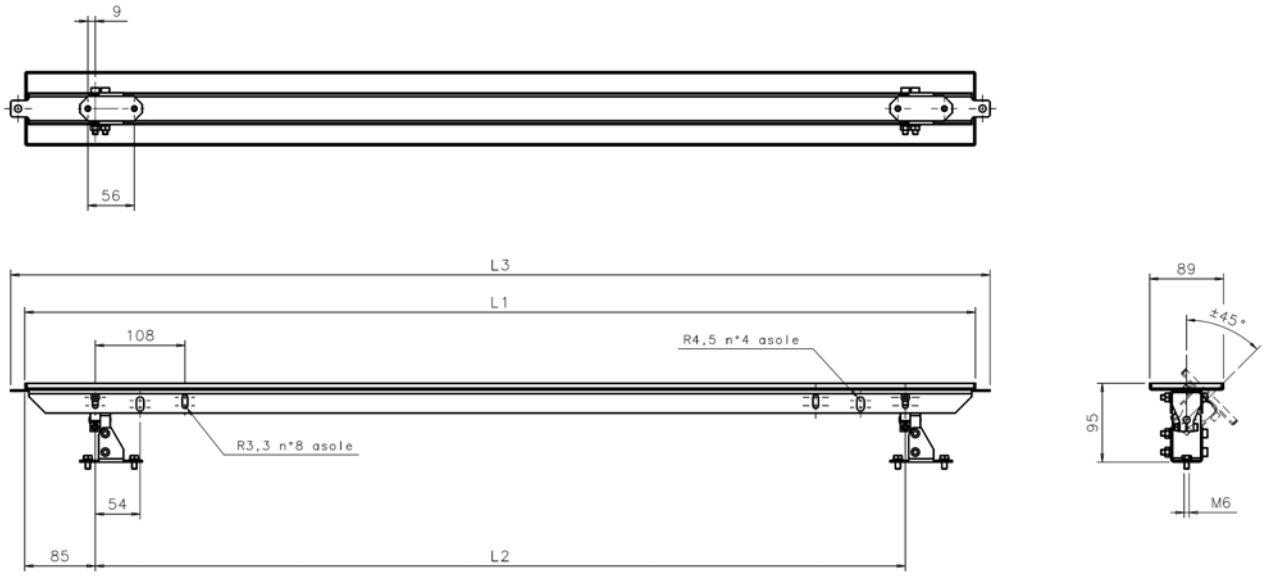

MODEL	DESCRIPTION	L_1 (mm)	L_2 (mm)	L_3 (mm)	CODE
SG-DM 600	Deviating mirror version 600 mm	545	376	580	95ASE1680
SG-DM 900	Deviating mirror version 900 mm	845	676	880	95ASE1690
SG-DM 1200	Deviating mirror version 1200 mm	1145	976	1180	95ASE1700
SG-DM 1650	Deviating mirror version 1650 mm	1595	1426	1630	95ASE1710
SG-DM 1900	Deviating mirror version 1900 mm	1845	1676	1880	95ASE1720

Fixing kit

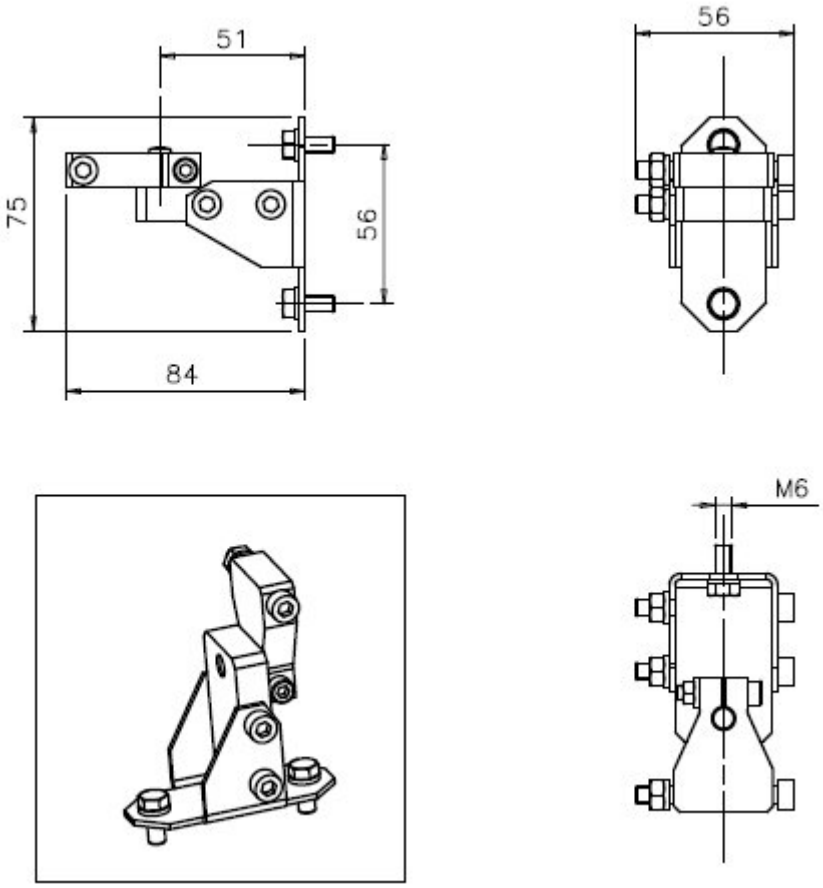

MODEL	DESCRIPTION	CODE
ST-DM	Kit “STAND ALONE”	95ASE1940

15.4 COLUMNS AND FLOOR STANDS

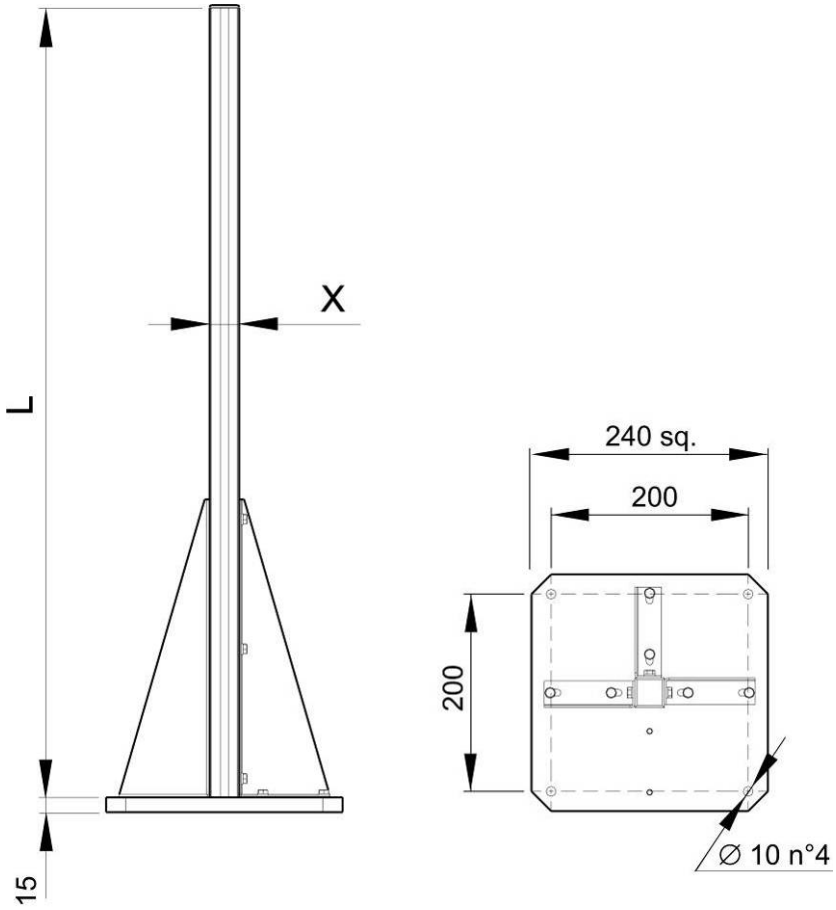

MODEL	DESCRIPTION	L (mm)	X (mm)	CODE
SE-S 800	Column and floor stand H = 800 mm	800	30x30	95ACC1730
SE-S 1000	Column and floor stand H = 1000 mm	1000	30x30	95ACC1740
SE-S 1200	Column and floor stand H = 1200 mm	1200	30x30	95ACC1750
SE-S 1500	Column and floor stand H = 1500 mm	1500	45x45	95ACC1760
SE-S 1800	Column and floor stand H = 1800 mm	1800	45x45	95ACC1770

15.5 LENS SHIELD (PMMA)

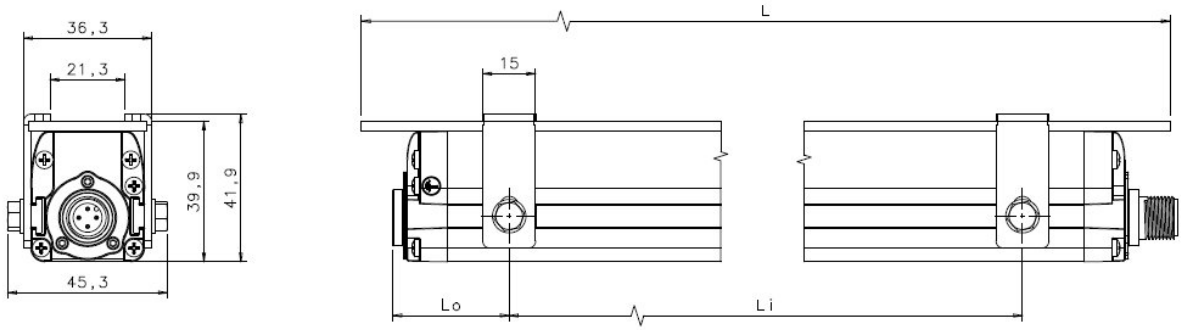

Measurement in mm									
	SG2, SG4B, SE Hand/Finger protection				SE Body protection				
	VERS.	L	Li	Lo	VERS.	L	Li	Lo	
n°2+2 BRACKETS	15	245	160	30	2r 050	642	490	75	n°2+2 BRA-CKETS
	30	392	345	45	3r 080	942	640	175	
	45	540	400	60	4r 090	1042	660	200	
	60	686	520	75					n°3+3 BRA-CKETS
	75	832	590	115					
	90	980	640	175	4r 120	1342	480	200	
	105	1126	740	200					
n°3+3 BRACKETS	120	1274	445	200					
	135	1422	520	200					
	150	1568	595	200					
	165	1715	670	200					
	180	1860	745	200					

MODEL	DESCRIPTION	CODE
SG-LS 150	Lens Shield H=150mm (5pcs)	95ASE1450
SG-LS 300	Lens Shield H=300mm (5pcs)	95ASE1460
SG-LS 450	Lens Shield H=450mm (5pcs)	95ASE1470
SG-LS 600	Lens Shield H=600mm (5pcs)	95ASE1480
SG-LS 750	Lens Shield H=750mm (5pcs)	95ASE1490
SG-LS 900	Lens Shield H=900mm (5pcs)	95ASE1500
SG-LS 1050	Lens Shield H=1050mm (5pcs)	95ASE1510
SG-LS 1200	Lens Shield H=1200mm (5pcs)	95ASE1520
SG-LS 1350	Lens Shield H=1350mm (5pcs)	95ASE1530
SG-LS 1500	Lens Shield H=1500mm (5pcs)	95ASE1540
SG-LS 1650	Lens Shield H=1650mm (5pcs)	95ASE1550
SG-LS 1800	Lens Shield H=1800mm (5pcs)	95ASE1560
SG-LS-2-050	Lens Shield H=500mm (5pcs)	95ASE1570
SG-LS-3-080	Lens Shield H=800mm (5pcs)	95ASE1580
SG-LS-4-090	Lens Shield H=900mm (5pcs)	95ASE1590
SG-LS-4-120	Lens Shield H=1200mm (5pcs)	95ASE1600

NOTE :Each package contains what is necessary to protect a single unit (TX or RX). To protect both TX and RX , two pieces of the same code are needed

MODEL	DESCRIPTION	CODE
SG-LS-MC4	Elastic fastner for LENS SH IELD (kit 4pcs.)	95ASE1810

15.6 PROTECTIVE STANDS

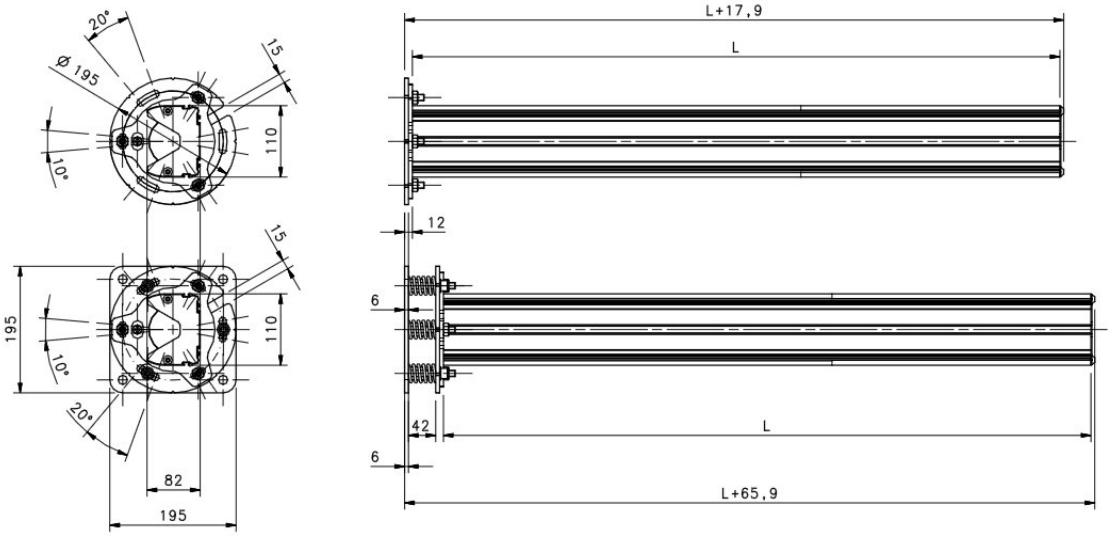

MODEL	DESCRIPTION	L (mm)	CODE
SG-PSB 600	Protective stand H=600mm	600	95ASE2240
SG-PSB 1000	Protective stand H=1000mm	1000	95ASE2250
SG-PSB 1200	Protective stand H=1200mm	1200	95ASE2260
SG-PSB 1650	Protective stand H=1650mm	1650	95ASE2270
SG-PSB 1900	Protective stand H=1900mm	1900	95ASE2280

Fixing kit

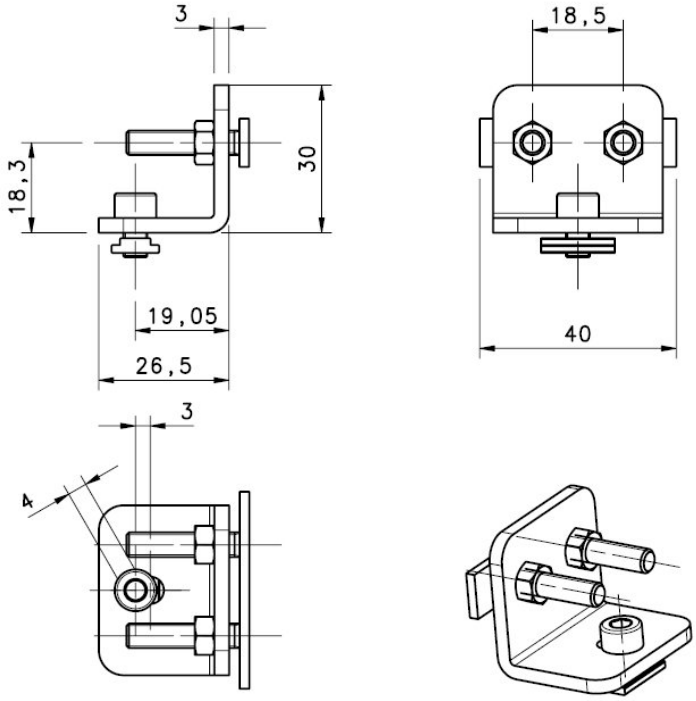

MODEL	DESCRIPTION	CODE
ST-PS4-SG-SE	Kit 4pcs for protect ive stands mounting	95ASE1750
ST-PS6-SG-SE	Kit 6pcs for protect ive stands mounting	95ASE1760

15.7 PLATE FOR PROTECTIVE STANDS

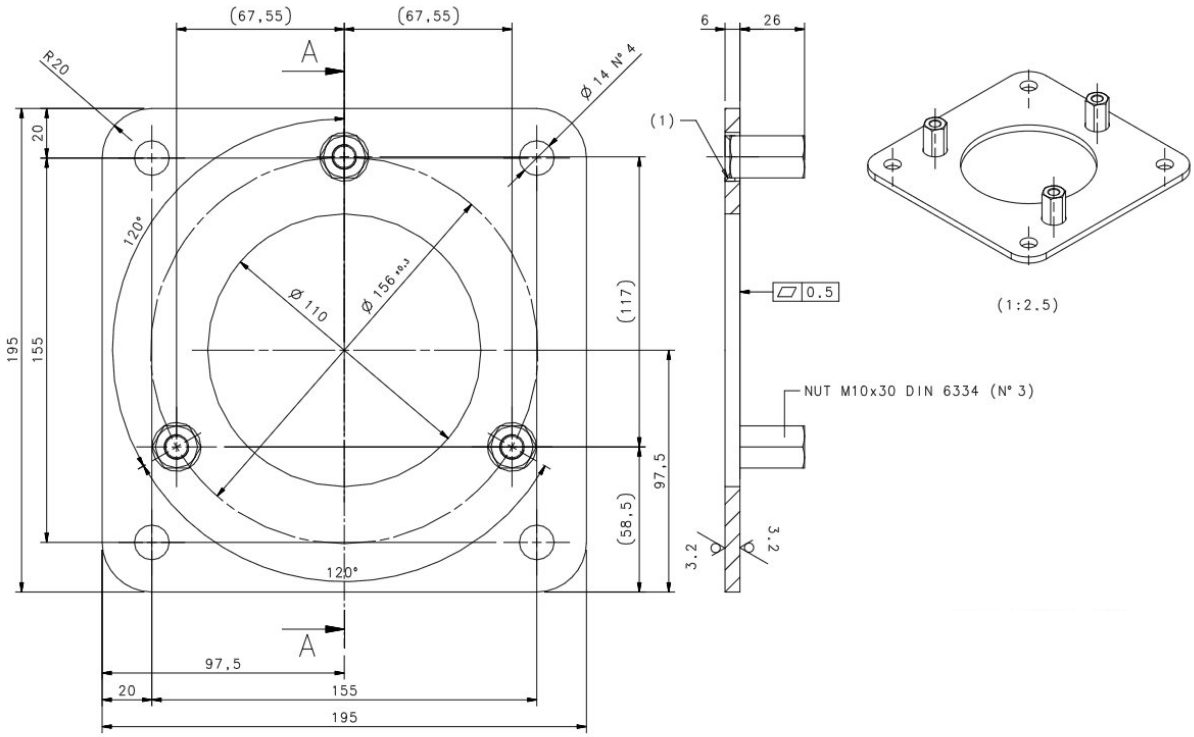

MODEL	DESCRIPTION	CODE
SG-P	Plate kit for SG-PSG	95ASE2290

15.8 TEST PIECE

MODEL	DESCRIPTION	CODE
TP-14	Test piece Ø 14mm L = 300mm	95ACC1630
TP-30	Test piece Ø 30mm L = 300mm	95ACC1650

15.9 SG4-DONGLE ETHERNET ADAPTOR

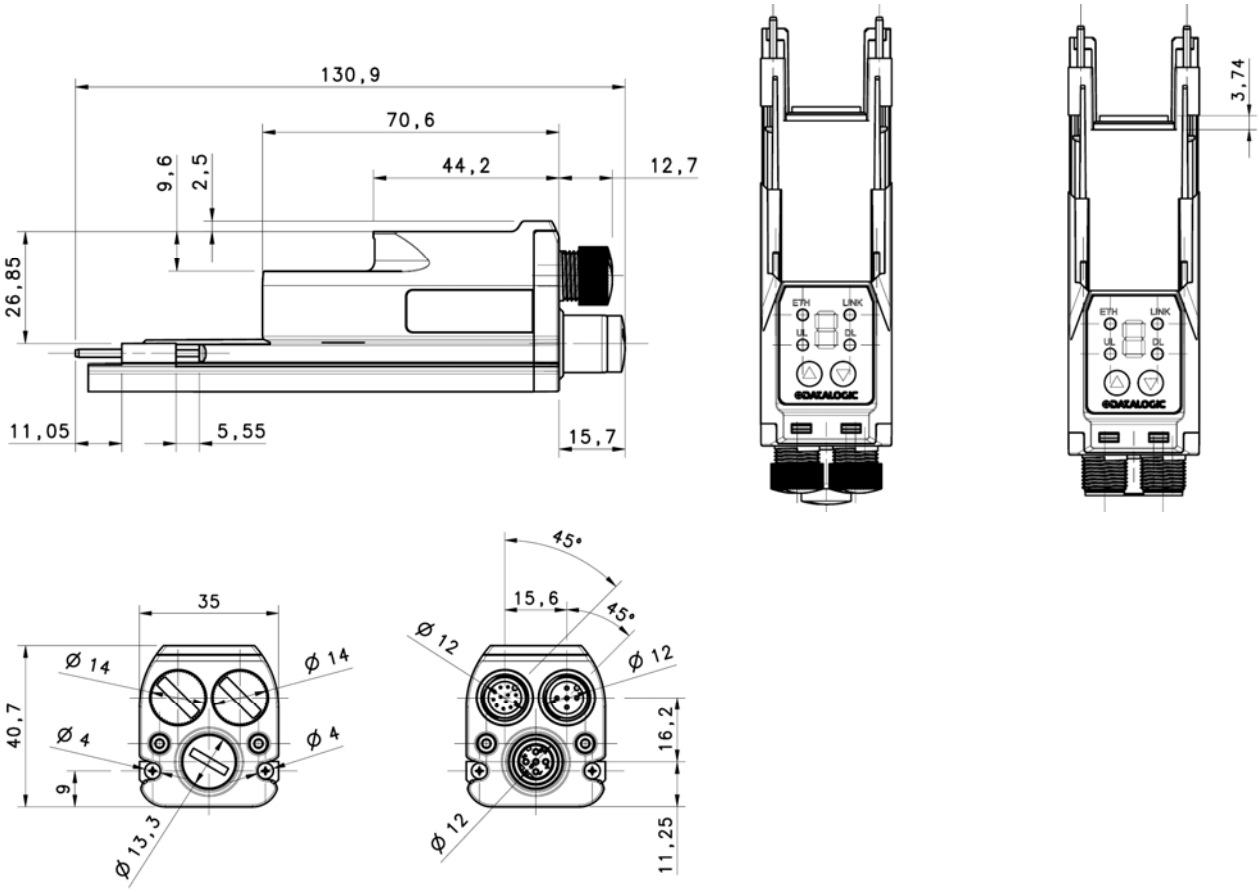

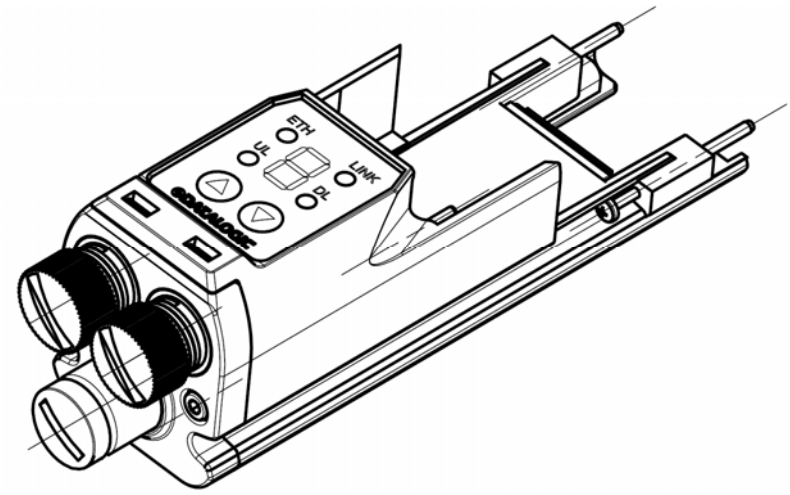

MODEL	DESCRIPTION	CODE
SG4-DONGLE	ETHERNET ADAPTOR	95ASE2080

15.10 SAFETY RELAY

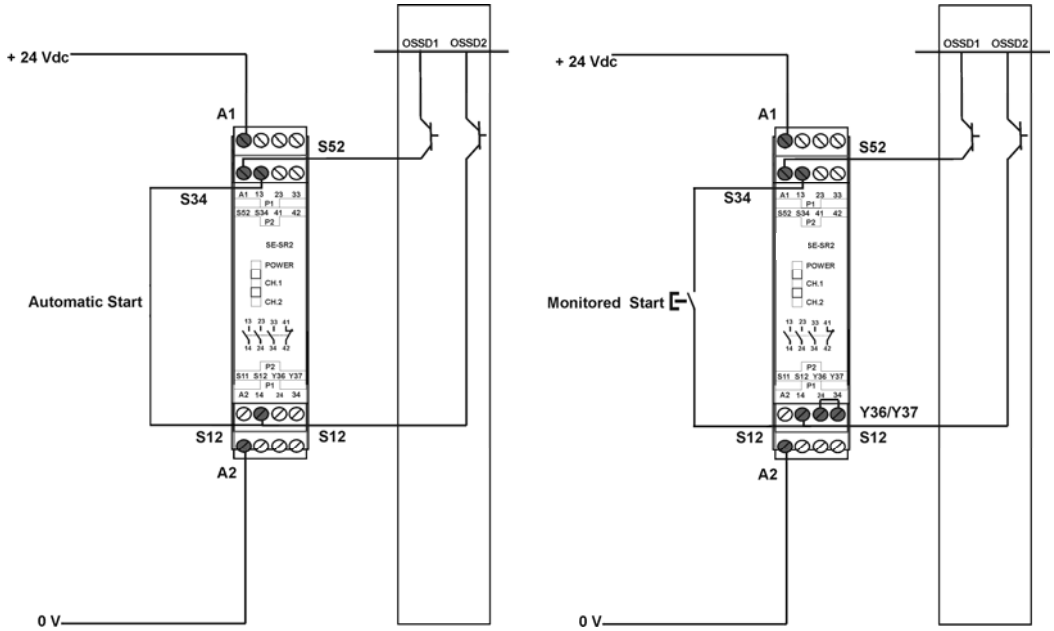

The drawings show the connection between the safety light curtain and the type 4 safety relay of the SE-SR2 series operating in the automatic Restart mode(on the left) and manual Restart mode with monitoring (on the right).

MODEL	DESCRIPTION	CODE
SE-SR2	Type 4 safety relay - 3 NQ 1 NC	95ACC6170

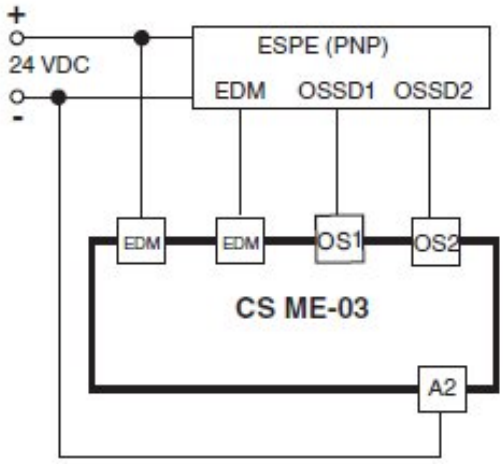

MODEL	DESCRIPTION	CODE
CS ME-03VU24-Y14	EDM Relay Box	95ASE1270

15.11 CONNECTION CABLES

MODEL	DESCRIPTION			CODE
CS-A1-03-U-03	5-pole M12 cable (axial)	3 m	UL2464	95ASE1170
CS-A1-03-U-05	5-pole M12 cable (axial)	5 m	UL2464	95ASE1180
CS-A1-03-U-10	5-pole M12 cable (axial)	10 m	UL2464	95ASE1190
CS-A1-03-U-15	5-pole M12 cable (axial)	15 m	UL2464	95ASE1200
CS-A1-03-U-25	5-pole M12 cable (axial)	25 m	UL2464	95ASE1210
CS-A1-03-U-50	5-pole M12 cable (axial)	50 m	UL2464	95A252700
CS-A1-10-U-03	12-pole M12 cable (axial)	3 m	UL2464	95A252720
CS-A1-10-U-05	12-pole M12 cable (axial)	5 m	UL2464	95A252730
CS-A1-10-U-10	12-pole M12 cable (axial)	10 m	UL2464	95A252740
CS-A1-10-U-15	12-pole M12 cable (axial)	15 m	UL2464	95A252750
CS-A1-10-U-25	12-pole M12 cable (axial)	25 m	UL2464	95A252760
CS-A1-10-U-50	12-pole M12 cable (axial)	50 m	UL2464	95A252770

TX - PIG-TAIL CABLE

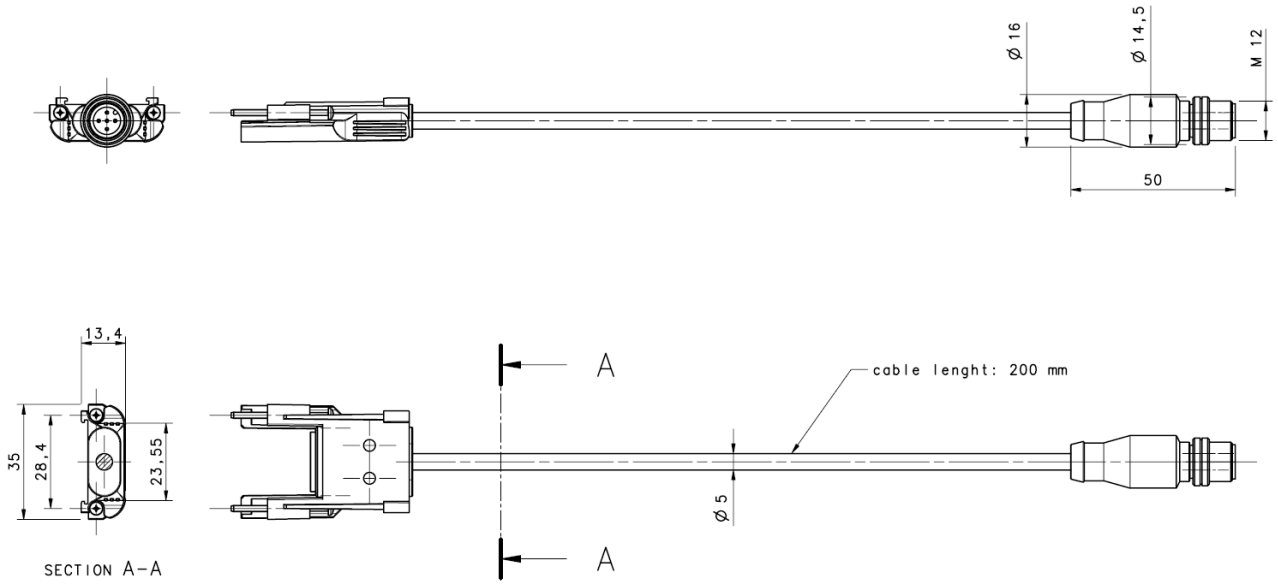

This is the Pig-Tail cable that must be always used for TX UNIT SG4 EXTENDED.
It has a 18 poles socket in one side and a M12 5 poles in the other.

RX MUTING - PIG-TAIL CABLE

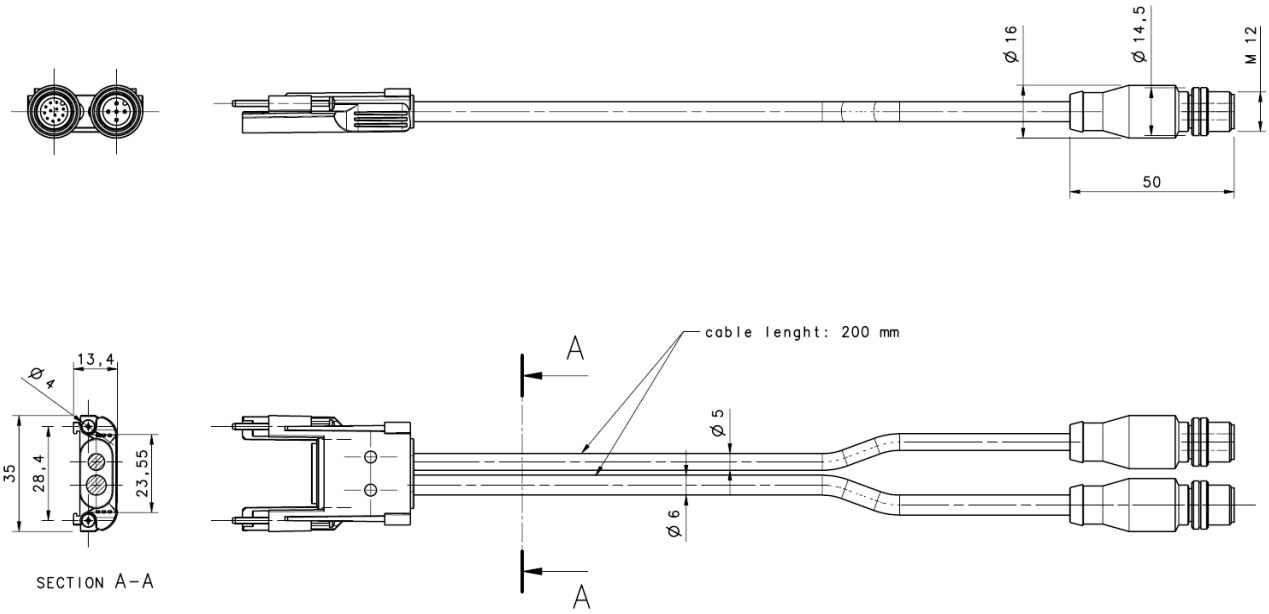

This is the Pig-Tail cable that must be always used for RX UNIT SG4 EXTENDED when you configure it in MUTING MODE and DON'T USE SG4 DONGLE. It has a 18 poles socket in one side and a M12 5 poles plus M12 12 poles in the other.

MODEL	DESCRIPTION	CODE
CS-G1-50-B-002	SG EXTENDED TX 0,2m	95A252820
CS-R1-75-B-002	SG EXTENDED MUTING RX 0,2m	95A252810

15.12 MUTING ARMS

The SG2 MUTING series light curtains can be equipped with retro-reflective muting arms to obtain the “T” or “L” configuration.

The following figures show, respectively, the dimensions of single active arms, of single passive arms, and the corresponding fixing bracket stand alone.

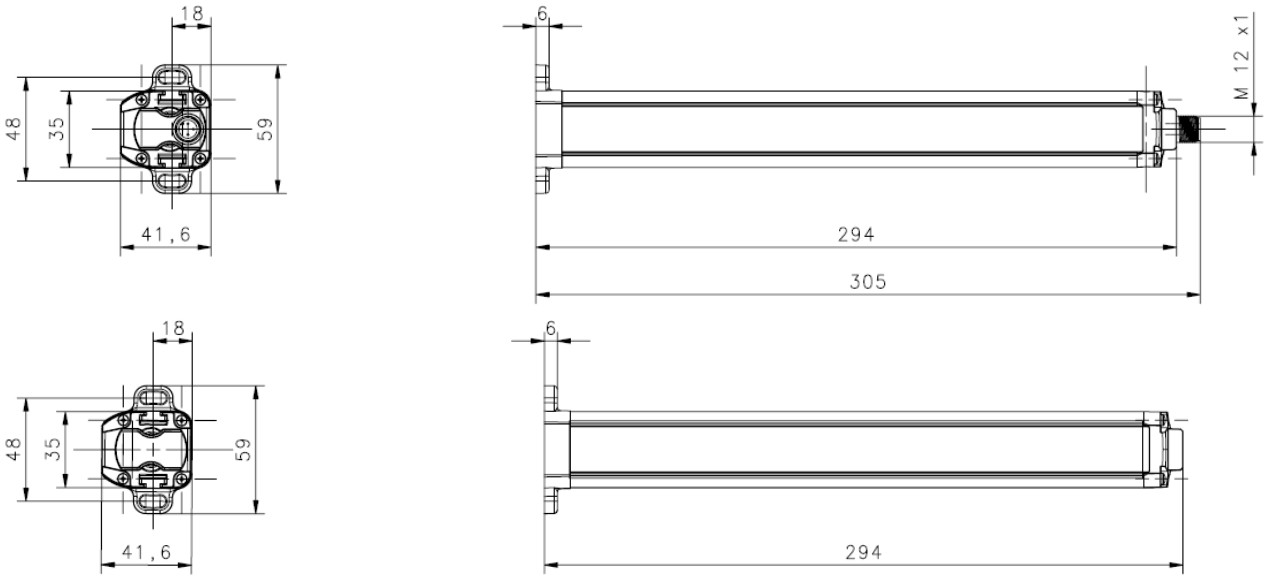

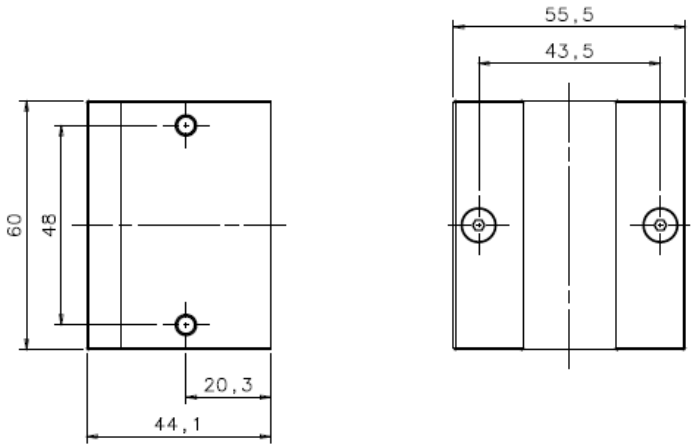

MODEL	DESCRIPTION	CODE
SG-AS-ARM	SINGLE ACTIVE ARM WITH RRX SENSORS V2	95ASE1841
SG-PR-ARM	SINGLE PASSIVE ARM WITH REFLECTORS V2	95ASE1851
SG-CB-C	MUTING ARMS MOUNTING BRACKET KIT	95ASE1930

The following figures show, respectively, the dimensions of single active arms with fixing bracket mounted, of single passive arms with fixing bracket mounted, of double active arms with fixing bracket mounted, of double passive arms with fixing bracket mounted.

ACTIVE/PASSIVE ARMS L

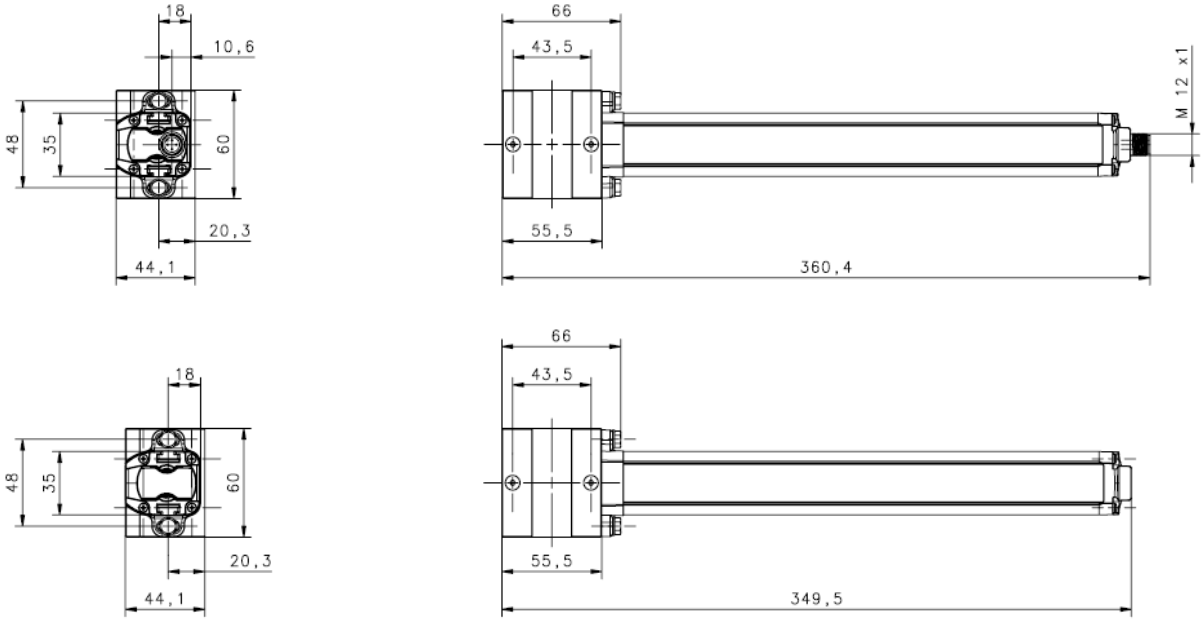

ACTIVE/PASSIVE ARMS T

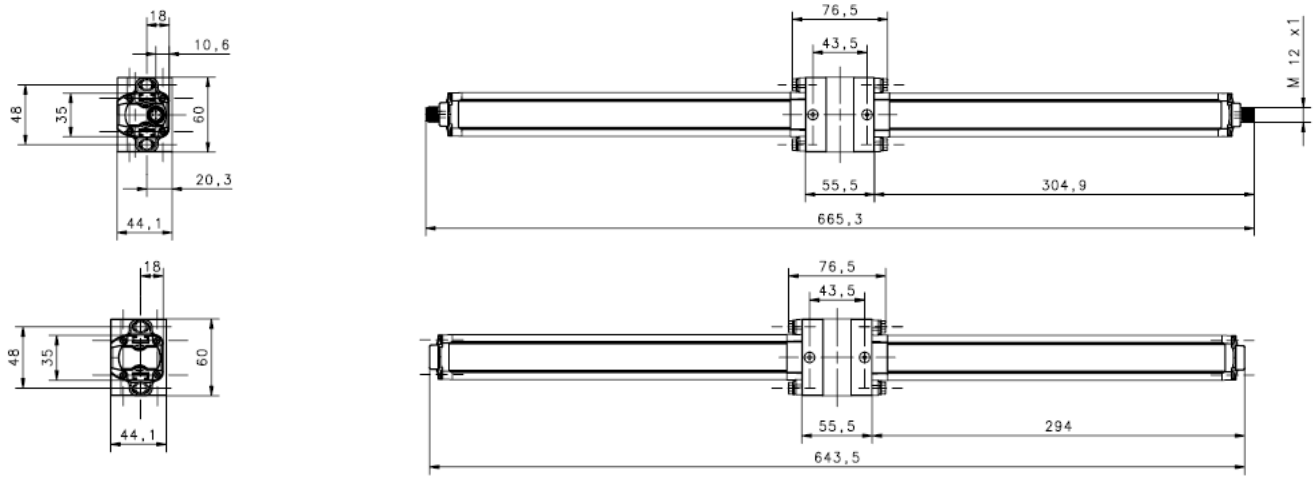

MODEL	DESCRIPTION	CODE
SG-L-ARMS	ACTIVE/PASSIVE ARMS L COUPLE V2	95ASE1861
SG-T-ARMS	ACTIVE/PASSIVE ARMS T COUPLE V2	95ASE1871

SG2 MUTING + BRACCI ATTIVO/PASSIVO L

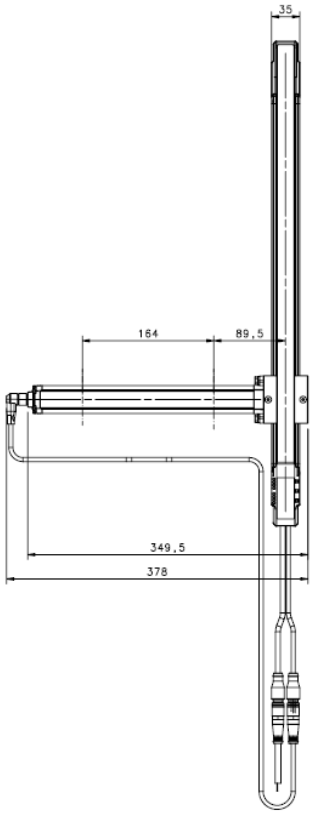

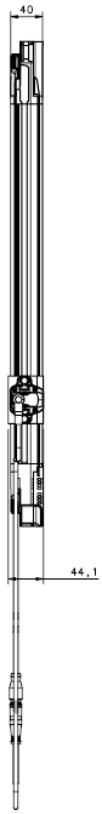

SG2 MUTING + BRACCI ATTIVO/PASSIVO T

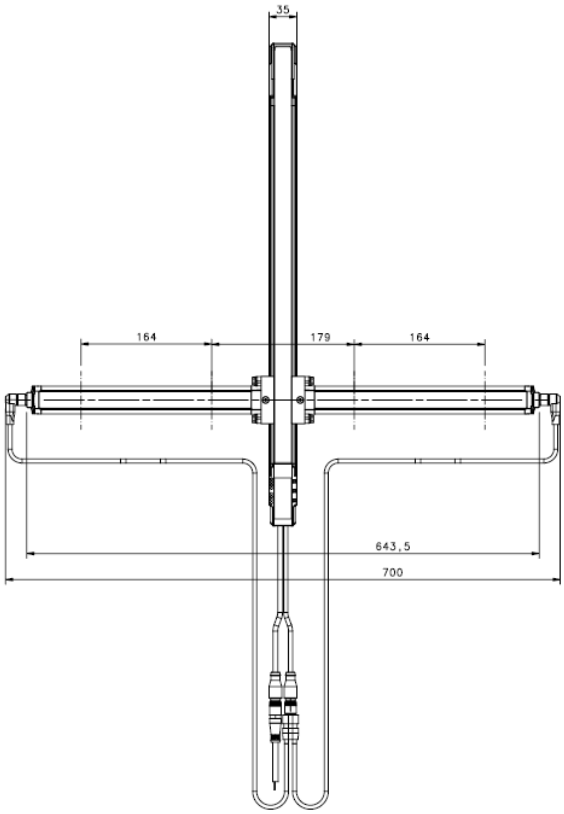

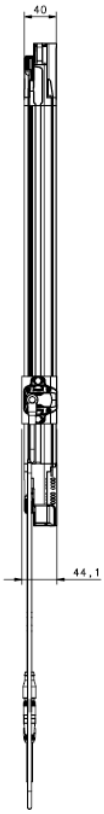

GLOSSARY

ELECTROSENSITIVE PROTECTIVE EQUIPMENT (ESPE): assembly of devices and/or components working together to activate the protective disabling function or to detect the presence of something and including at least: a sensor, command/control devices and output signal switching devices.

PROTECTED AREA: area where a specified test object is detected by the ESPE.

SAFETY LIGHT CURTAIN: it is an active optoelectronic protective device (AOPD) including an integrated system consisting of one or several emitting elements and one or several receiving elements forming a detection area with a detecting capacity specified by the supplier.

DETECTING CAPACITY (= RESOLUTION): sensor function parameter limit as specified by the manufacturer, which activates the electrosensitive protection equipment (ESPE). In case of an active optoelectronic protective device (AOPD), with resolution we mean the minimum dimension, which an opaque object must have in order to interrupt at least one of the beams that constitute the sensitive area.

BLOCK CONDITION (=BREAK): status of the light curtain taking place when a suitably-sized opaque object (see DETECTING CAPACITY) interrupts one or several light curtain beams.
Under these conditions, OSSD1 and OSSD2 light curtain outputs are simultaneously switched OFF within the device response time.

OUTPUT SIGNAL SWITCHING DEVICE (OSSD): part of the ESPE connected to machine control system. When the sensor is enabled during standard operating conditions, it switches to disabled status.

FINAL SWITCHING DEVICE (FSD): part of the control system involving machine safety conditions. It breaks the circuit to the machine primary control element (MPCE) when the output signal switching device (OSSD) becomes inactive.

PROTECTIVE DEVICE: device having the function to protect the operator against possible risks of injury due to the contact with machine potentially-dangerous parts.

ACTIVE OPTOELECTRONIC PROTECTIVE DEVICE (AOPD): its detection function is achieved thanks to the use of optoelectronic receivers and emitters detecting the optical beams interruptions inside the device caused by an opaque object present inside the specified detecting area.
An active optoelectronic protective device (AOPD) can operate both in emitter-receiver mode and in retro-reflective light curtains.

MIN. INSTALLATION DISTANCE: min. distance necessary to allow machine dangerous moving parts to completely stop before the operator can reach the nearest dangerous point. This distance shall be measured from the middle point of the detecting area to the nearest dangerous point. Factors affecting min. installation distance value are machine stop time, total safety system response time and light curtain resolution.

MACHINE PRIMARY CONTROL ELEMENT (MPCE): electrically-powered element having the direct control of machine regular operation so as to be the last element, in order of time, to operate when the machine has to be enabled or blocked.

EMITTER: unit emitting infrared beams, consisting of a set of optically-synchronised LEDs. The emitting unit, combined with the receiving unit (installed in the opposite position), generates an optical “curtain”, i.e. the detecting area.

START INTERLOCKING DEVICE (= START): device preventing machine automatic start if the ESPE is live or the voltage is disabled and enabled once again.

RESTART INTERLOCKING DEVICE (= RESTART): device preventing machine automatic restart after sensor activation during a dangerous phase of machine operating cycle, after a change of machine operating mode, and after a variation in machine start control devices.

CONTROLLED MACHINE: machine having the potentially-dangerous points protected by the light curtain or by another safety system.

MACHINE OPERATOR: qualified person allowed to use the machine.

QUALIFIED OPERATOR: a person who holds a professional training certificate or having a wide knowledge and experience and who is acknowledged as qualified to install and/or use the product and to carry out periodical test procedures.

WORKING POINT: machine position where the material or semifinished product is worked.

RECEIVER: unit receiving infrared beams, consisting of a set of optically-synchronised phototransistors. The receiving unit, combined with the emitting unit (installed in the opposite position), generates an optical “curtain”, i.e. the detecting area.

RISK: probability of occurrence of an injury and severity of the injury itself.

CROSSING HAZARD: situation under which an operator crossing the area controlled by the safety device and this latter stops and keeps the machine stopped until the hazard is eliminated, and then enters the dangerous area. Now the safety device could not be able to prevent or avoid an unexpected restart of the machine with the operator still present inside the dangerous area.

OFF STATUS: status when the output circuit is interrupted and does not allow current stream.

ON STATUS: status when the output circuit is operational and allows current stream.

RESPONSE TIME: max. time elapsing between the occurrence of the event leading to sensor activation and the reaching of the inactive state by the output signal switching device (OSSD).

TEST PIECE: opaque object having a suitable size and used to test safety light curtain correct operation.

TYPE (OF ESPE): the Electrosensitive Protective Equipment (ESPE) have different reactions in case of faults or under different environmental conditions. The classification and definition of the "type" (ex. type 2, type 4, according to IEC 61496-1) defines the minimum requirements needed for ESPE design, manufacturing and testing.

DANGEROUS AREA: area representing an immediate or imminent physical hazard for the operator working inside it or who could get in contact with it.